DOCUMENT 00 90 00
ADDENDUM

ADDENDUM NO. [2] **Date: February 26, 2020**

RE: **WESTERN TECHNICAL COLLEGE**
APPRENTICESHIP CENTER REMODEL
2860 21ST PLACE SOUTH
LA CROSSE, WISCONSIN 54601
HSR PROJECT NO. 19021

FROM: HSR Associates, Inc
100 Milwaukee Street
La Crosse, WI 54603
(608) 784-1830

To: Prospective Bidders
This addendum forms a part of the Contract Documents and modifies the original Bidding Documents dated February 2020. Acknowledge receipt of this Addendum in the space provided on the bid form. Failure to do so may subject the Bidder to disqualification.

This Addendum consists of [3] pages, Pre-bid attendance, [2] specification sections and [25] 30 x 42 drawings.

Pre-bid attendance attached hereto.

CHANGES TO DIVISION 1 GENERAL REQUIREMENTS

1. Section 01 23 00 ALTERNATES
   a. Alternate 2 HVAC: Work shall include electrical feed, disconnect and connection to AHU-2.
   b. Alternate 3 Exterior Renovation and Addition: Work shall include all electrical related to new vestibule (door operators, door security, interior/exterior light fixtures and receptacles).

CHANGES TO SPECIFICATIONS:

2. Section 04 20 00 UNIT MASONRY
   a. 2.02, B, 1: Brick size shall be Modular, 2 ¼ x 3 5/8 x 7 5/8.
3. Section 07 21 00 THERMAL INSULATION
   a. 2.02, A, 6: Replace with the following:
   Type and Compressive Resistance: Type IX, 25 psi (173 kPa), minimum.
4. Section 07 42 16 – METAL WALL PANEL/RAIN SCREEN ASSEMBLY
   a. Page 12, B, 1, a: Type 4 panel shall be 0.040 thick metal in lieu of 0,080.
5. Section 08 36 13 SECTIONAL DOORS
   a. Section attached hereto to replace original section to reflect aluminum glazed door.
6. Section 10 44 00 FIRE PROTECTION SPECIALTIES
   a. Section attached hereto as part of Contract Documents.

CHANGES TO DRAWINGS

7. Sheet C200 LAYOUT PLAN 30 x 42 attached hereto
   a. Revisions clouded on Drawing.
8. Sheet A090 REMOVAL 30 x 42 attached hereto
   a. Revisions clouded on Drawing.
9. Sheet A100 FIRST FLOOR REMODEL PLAN 30 x 42 attached hereto
   a. Revisions clouded on Drawing.
10. Sheet A300 BUILDING SECTIONS 30 x 42 attached hereto
    a. Revisions clouded on Drawing.
11. Sheet A311 WALL SECTIONS 30 x 42 attached hereto
    a. Revisions clouded on Drawing.
12. Sheet A600 WALL TYPES 30 x 42 attached hereto
    a. Revisions clouded on Drawing.
    b. Exterior gyp sheathing shall be 5/8” in lieu of ½”.
13. Sheet P090 PLUMBING UNDERFLOOR DEMOLITION PLAN 30 x 42 attached hereto
    a. Revisions clouded on Drawing.
14. Sheet P091 PLUMBING FIRST FLOOR DEMOLITION PLAN 30 x 42 attached hereto
    a. Revisions clouded on Drawing
15. Sheet P100 PLUMBING UNDERFLOOR PLAN – NEW WORK 30 x 42 attached hereto
    a. Revisions clouded on Drawing
16. Sheet P101 PLUMBING FLOOR PLAN – NEW WORK 30 x 42 attached hereto
    a. Revisions clouded on Drawing
17. Sheet P200 PLUMBING ENLARGED UNDERFLOOR PLAN 30 x 42 attached hereto
    a. Revisions clouded on Drawing
18. Sheet P201 PLUMBING ENLARGED FIRST FLOOR PLAN 30 x 42 attached hereto
    a. Revisions clouded on Drawing
19. Sheet P400 PLUMBING ISOMETRICS, SCHEMATICS AND DETAILS 30 x 42 attached hereto.
    a. Revisions clouded on Drawing
20. Sheet P401 PLUMBING DISPLAY, DETAILS AND SCHEMATICS 30 x 42 attached hereto.
    a. Revisions clouded on Drawing
21. Sheet P500 PLUMBING SCHEDULES 30 x 42 attached hereto
    a. Revisions clouded on Drawing
22. Sheet E001R ELECTRICAL SITE PLAN 30 x 42 attached hereto
    a. Revisions clouded on Drawing.
23. Sheet E101R LIGHTING PLAN 30 x 42 attached hereto
    a. Revisions clouded on Drawing.
24. Sheet E201R POWER PLAN 30 x 42 attached hereto

    a. Revisions clouded on Drawing.

25. Sheet E202R.1 ENLARGED ELECTRICAL PLANS 30 x 42 attached hereto
    a. Revisions clouded on Drawing.

26. Sheet E203R ENLARGED FLEX LAB 107 30 x 42 attached hereto
    a. Revisions clouded on Drawing.

27. Sheet E301R LOW VOLTAGE PLAN 30 x 42 attached hereto
    a. Revisions clouded on Drawing.

28. Sheet E601R ELECTRICAL SCHEDULES 30 x 42 attached hereto
    a. Revisions clouded on Drawing.

29. Sheet E603R ELECTRICAL SCHEDULES 30 x 42 attached hereto
    a. Revisions clouded on Drawing.

30. Sheet E604R ELECTRICAL SCHEDULES 30 x 42 attached hereto
    a. Revisions clouded on Drawing.

31. Sheet FA01R FIRE ALARM PLAN 30 x 42 attached hereto
    a. Revisions clouded on Drawing.

END OF DOCUMENT 00 90 00

Page Intentionally Left Blank

ARCHITECTURE
ENGINEERING
INTERIOR DESIGN
HSR Associates
Celebrating 65 Years of Innovative Design

Pre-Bid Meeting Sign-In Sheet

February 18, 2020

PROJECT: **WESTERN TECHNICAL COLLEGE**
APPRENTICESHIP CENTER REMODEL
LA CROSSE, WISCONSIN 54601
HSR 19021

BID OPENING: 2:00 PM, March 3, 2020

	Name	Company
1.	Doug Ramsey	HSR
2.	Michelle Maland	HSR
3.	Pat Popowich	Galileo
4.	Evan Erickson	Olympic
5.	ERIC LEHMANN	FOWLER & HAMMER
6.	TONY REYERSON	Modern
7.	Scott Stangel	Kish
8.	Greg Bush	Bush Electric
9.	WADE OLSON	BRICKL BROS
10.	Michael Diehl	Brickl Bros.
11.	BRET HAFFNER	J.F. AHERN
12.	Kevin Larson	Schwickerts
13.	Jay McHenry	WTC
14.	Wade Woods	LaX Backhoe
15.	CHRIS OLSON	GALILEO
16.	Steve Wohlwend	Tri-State Carpets
17.	Kevin Kudera	B+B Elec
18.	Joe Dwyer	Wieser Brothers
19.	Marcus Schindler	M+J

Name	Company
20. Kevin Berg	Market & Johnson
21. Steve Kepros	Market & Johnson
22. Rick Iverson	General Sprinkler Corp.
23. DAN ELMORE	The Pane Shop Glass Co.
24.	
25.	
26.	
27.	
28.	
29.	
30.	
31.	
32.	
33.	
34.	
35.	
36.	
37.	
38.	
39.	
40.	

SECTION 08 36 13

SECTIONAL DOORS

PART 1 GENERAL

1.01 SECTION INCLUDES

A. Overhead sectional doors, manually operated.

B. Operating hardware and supports.

1.02 RELATED REQUIREMENTS

A. Section 05 50 00 - Metal Fabrications: Steel bent plate opening frame.

1.03 REFERENCE STANDARDS

A. ASTM B221 - Standard Specification for Aluminum and Aluminum-Alloy Extruded Bars, Rods, Wire, Profiles, and Tubes; 2014.

B. ASTM B221M - Standard Specification for Aluminum and Aluminum-Alloy Extruded Bars, Rods, Wire, Profiles, and Tubes (Metric); 2013.

C. ASTM C1048 - Standard Specification for Heat-Strengthened and Fully Tempered Flat Glass; 2012.

D. ASTM E283 - Standard Test Method for Determining the Rate of Air Leakage Through Exterior Windows, Curtain Walls, and Doors Under Specified Pressure Differences Across the Specimen; 2004 (Reapproved 2012).

E. ASTM E330/E330M - Standard Test Method for Structural Performance of Exterior Windows, Doors, Skylights and Curtain Walls by Uniform Static Air Pressure Difference; 2014.

F. DASMA 102 - American National Standard Specifications for Sectional Overhead Type Doors; 2011.

1.04 SUBMITTALS

A. See Section 01 30 00 - Administrative Requirements, for submittal procedures.

B. Shop Drawings: Indicate opening dimensions and required tolerances, connection details, anchorage spacing, hardware locations, and installation details.

C. Product Data: Show component construction, anchorage method, and hardware. When glass is installed include unit u-value, center of glass u-value, visual light transmittance and solar heat gain cooefficient.

D. Manufacturer's Installation Instructions: Include any special procedures required by project conditions.

E. Operation Data: Include normal operation, troubleshooting, and adjusting.

F. Maintenance Data: Include data for motor and transmission, shaft and gearing, lubrication frequency, spare part sources.

G. Warranty: Submit manufacturer warranty and ensure forms have been completed in Owner's name and registered with manufacturer.

1.05 QUALITY ASSURANCE

1.06 WARRANTY

A. See Section 01 78 00 - Closeout Submittals for warranty requirements.

B. Correct defective Work within a two year period after Date of Substantial Completion.

PART 2 PRODUCTS

2.01 MANUFACTURERS

A. Sectional Doors:
  1. Clopay Building Products: www.clopaydoor.com/#sle.
  2. Wayne-Dalton, a Division of Overhead Door Corporation: www.wayne-dalton.com/#sle.
  3. Overhead Door Co. .
  4. Cornell .
  5. Raynor Garage Doors .
  6. Pugleasa.
  7. C.H.I. Overhead Door
  8. Substitutions: See Section 01 60 00 - Product Requirements.

2.02 ALUMINUM DOORS

A. Aluminum Doors: Stile and rail aluminum with glazed panels; standard lift operating style with track and hardware; complying with DASMA 102, Commercial application.
   1. Performance: Withstand positive and negative wind loads equal to 1.5 times design wind loads specified by local code without damage or permanent set, when tested in accordance with ASTM E330/E330M, using 10 second duration of maximum load.
   2. Door Nominal Thickness: 1-3/4 inches thick.
   3. Air Leakage Rate: Less than 0.40 cfm/sf when tested in accordance with ASTM E283 at test pressure difference of 1.57 psf.
   4. Glazed Lights: Full panel width, all rows; set in place with resilient glazing channel.
   5. Manual Operation: Pull rope.

B. Door Panels: Paneled aluminum construction for glazed units; extruded aluminum stiles and rails; stile and rail joints welded; rabbeted weather joints at meeting rails.

C. Glazing: Fully tempered glass; insulated glass units; clear; 5/8 inch overall thickness.

2.03 COMPONENTS

A. Track: Rolled galvanized steel, 0.060 inch minimum thickness; 2 inch wide, continuous one piece per side; galvanized steel mounting brackets 1/4 inch thick.

B. Hinge and Roller Assemblies: Heavy duty hinges and adjustable roller holders of stainless steel; floating hardened steel bearing rollers, located at top and bottom of each panel, each side.

C. Lift Mechanism: Torsion spring on cross head shaft, with braided stainless steel lifting cables.
   1. For Manual Operation: Requiring maximum exertion of 25 lbs force to open.

D. Sill Weatherstripping: Resilient hollow rubber strip, one piece; fitted to bottom of door panel, full length contact.

E. Jamb Weatherstripping: Roll formed steel section full height of jamb, fitted with resilient weatherstripping, placed in moderate contact with door panels.

F. Head Weatherstripping: EPDM rubber seal, one piece full length.

G. Panel Joint Weatherstripping: Neoprene foam seal, one piece full length.

H. Lock: Inside center mounted, adjustable keeper, spring activated latch bar with feature to retain in locked or retracted position; interior handle.

2.04 MATERIALS

A. Aluminum Extrusions: ASTM B221 (ASTM B221M), 6063 alloy, T6 temper.

B. Insulated Float Glass: Provide float glass glazing, unless noted otherwise.
   1. Heat-Strengthened and Fully Tempered Types: ASTM C1048.

PART 3 EXECUTION

3.01 EXAMINATION

A. Verify that wall openings are ready to receive work and opening dimensions and tolerances are within specified limits.

3.02 PREPARATION

A. Prepare opening to permit correct installation of door unit to perimeter air and vapor barrier seal.

3.03 INSTALLATION

A. Install door unit assembly in accordance with manufacturer's instructions.

B. Anchor assembly to wall construction and building framing without distortion or stress.

C. Securely brace door tracks suspended from structure. Secure tracks to structural members only.

D. Fit and align door assembly including hardware.

3.04 ADJUSTING

A. Adjust door assembly for smooth operation and full contact with weatherstripping.

3.05 CLEANING

A. Clean doors and frames.

B. Remove temporary labels and visible markings.

3.06 PROTECTION

A. Protect installed products from damage until Date of Substantial Completion.

B. Clean doors, frames .

C. Remove temporary labels and visible markings.

D. Do not permit construction traffic through overhead door openings after adjustment and cleaning.

END OF SECTION

Page Intentionally Left Blank

SECTION 10 44 00

FIRE PROTECTION SPECIALTIES

PART 1 GENERAL

1.01 SECTION INCLUDES

A. Fire extinguishers.

B. Fire extinguisher cabinets.

C. Accessories.

1.02 RELATED REQUIREMENTS

A. Applicable provisions of Division 1 shall govern the work of this section.

1.03 REFERENCE STANDARDS

A. NFPA 10 - Standard for Portable Fire Extinguishers; 2013.

1.04 SUBMITTALS

A. Manufacturer's Installation Instructions: Indicate special criteria and wall opening coordination requirements.

B. Manufacturer's Certificate: Certify that products meet or exceed specified requirements.

C. Maintenance Data: Include test, refill or recharge schedules and re-certification requirements.

PART 2 PRODUCTS

2.01 MANUFACTURERS

A. Fire Extinguisher Cabinets and Accessories:
  1. Ansul, a Tyco Business: www.ansul.com/#sle.
  2. JL Industries, Inc; www.jlindustries.com.
  3. Larsen's Manufacturing Co: www.larsensmfg.com/#sle.
  4. Potter-Roemer: www.potterroemer.com/#sle.
  5. Pyro-Chem, a Tyco Business: www.pyrochem.com/#sle.

2.02 FIRE EXTINGUISHERS

A. Fire Extinguishers - General: Comply with product requirements of NFPA 10 and applicable codes, whichever is more stringent.

B. Multipurpose Dry Chemical Type Fire Extinguishers: Carbon steel tank, with pressure gauge.
  1. Class: A:B:C type.
  2. Size: 10 pound.
  3. Finish: Baked polyester powder coat, red color.
  4. Temperature range: Minus 40 degrees F to 120 degrees F.

2.03 FIRE EXTINGUISHER CABINETS

A. Cabinet Construction: Non-fire rated.
  1. Formed primed steel sheet; 0.036 inch thick base metal.

B. Cabinet Configuration: Semi-recessed type FEC.
  1. Size to accommodate accessories.
  2. Projected Trim: Returned to wall surface, with 2 1/2 inch projection, and 1 1/2 inch wide face.

C. Door: 0.036 inch metal thickness, reinforced for flatness and rigidity with nylon catch. Hinge doors for 180 degree opening with two butt hinge.

D. Door Glazing: Acrylic plastic, obscure white, 1/8 inch thick, flat shape and set in resilient channel glazing gasket.

E. Weld, fill, and grind components smooth.

F. Finish of Cabinet Exterior Trim and Door: Red baked enamel.

G. Finish of Cabinet Interior: White colored enamel.

2.04 ACCESSORIES

A. Extinguisher Brackets: Formed steel, chrome-plated. Type: FE

PART 3 EXECUTION

3.01 EXAMINATION

A. Verify existing conditions before starting work.

B. Verify rough openings for cabinet are correctly sized and located.

3.02 INSTALLATION

A. Install in accordance with manufacturer's instructions.

B. Mount fire extinguishers in cabinets or on brackets so top of extinguisher is not higher than 48 inches above the floor.

C. Secure rigidly in place.

D. Place extinguishers in cabinets.

END OF SECTION

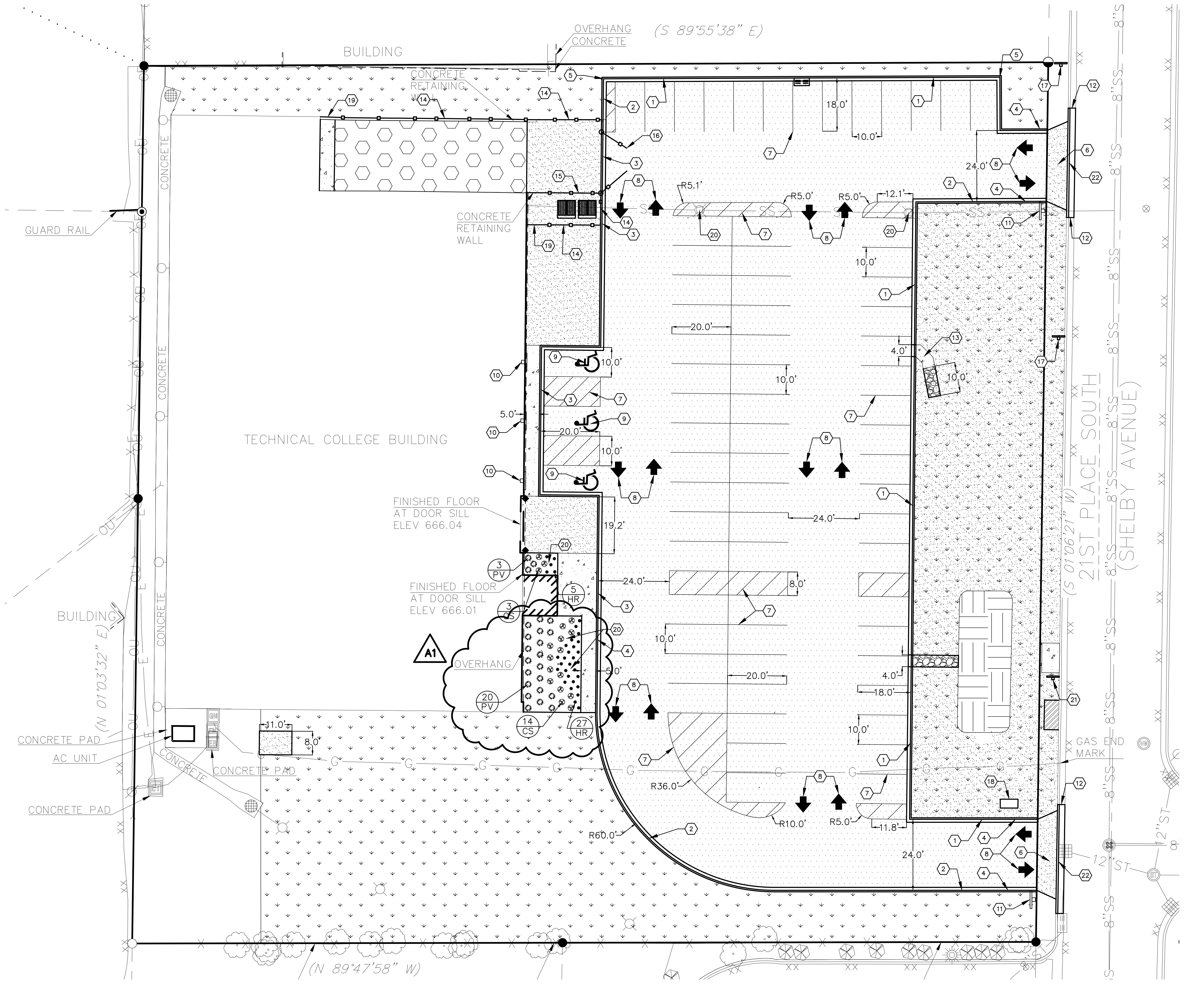
BUILDING
OVERHANG
CONCRETE
(S 89°55'38" E)
CONCRETE RETAINING WALL
CONCRETE RETAINING WALL
GUARD RAIL
TECHNICAL COLLEGE BUILDING
FINISHED FLOOR AT DOOR SILL ELEV 666.04
FINISHED FLOOR AT DOOR SILL ELEV 666.01
BUILDING
(N 01°03'32" E)
OVERHANG
CONCRETE PAD
AC UNIT
CONCRETE PAD
CONCRETE PAD
CONCRETE
21ST PLACE SOUTH
(SHELBY AVENUE)
(S 01°06'21" W)
GAS END MARK
(N 89°47'58" W)
8"SS
12"ST
18.0'
10.0'
20.0'
R5.1'
R5.0'
12.1'
24.0'
4.0'
5.0'
19.2'
8.0'
R36.0'
R60.0'
R10.0'
11.8'
31.0'
A1

GENERAL NOTES:

1. CONTACT DIGGER'S HOTLINE 5 WORKING DAYS PRIOR TO THE START OF DEMOLITION/CONSTRUCTION.
2. GRADE, LINE, AND LEVEL TO BE REVIEWED IN THE FIELD BY THE CONSTRUCTION MANAGER.
3. ALL REQUIRED EROSION CONTROL MEASURES ARE TO BE INSTALLED AND MAINTAINED IN ACCORDANCE WITH LOCAL MUNICIPAL AND DEPARTMENT OF NATURAL RESOURCES REGULATIONS.
4. SEE SHEET C400 FOR ALL REQUIRED EROSION CONTROL ELEMENTS.
5. ANY EXISTING UTILITIES NOT SHOWN ON THIS DOCUMENT WHICH NEED TO BE REMOVED, RELOCATED AND OR ADJUSTED SHALL BE THE RESPONSIBILITY OF THE SITE GRADING CONTRACTOR AND INCLUDED IN THE BASE BID CONTRACT.
6. VERIFY THE LOCATION OF ALL EXISTING UTILITIES PRIOR TO THE START OF DEMOLITION/CONSTRUCTION.
7. ALL BIDDERS SHALL VISIT THE SITE AND REVIEW EXISTING CONDITIONS PRIOR TO SUBMITTING A BID.
8. PRIOR TO THE START OF WORK VERIFY WITH THE LOCAL AUTHORITIES THAT ALL REQUIRED PERMITS HAVE BEEN ACQUIRED.
9. COORDINATE CONSTRUCTION IN THE RIGHT OF WAY WITH THE LOCAL AUTHORITIES.
10. PROVIDE PROPER BARRICADES, SIGNS AND TRAFFIC CONTROL TO MAINTAIN THRU TRAFFIC ALONG ADJACENT STREETS IN ACCORDANCE WITH LOCAL MUNICIPAL REQUIREMENTS.
11. SIDEWALK JOINTS TO BE AS INDICATED OR AS APPROVED BY CONSTRUCTION MANAGER.
12. ALL SAWCUTS SHALL BE AT AN EXISTING JOINT IN THE CURB AND PAVEMENT.
13. ALL GENERAL LANDSCAPE AREAS SHALL BE SEEDED/FERTILIZED/CRIMP HAY MULCHED IN ACCORDANCE WITH THE PROJECT SPECIFICATIONS.
14. THE LOCATIONS, DEPTHS, SIZES AND TYPES OF UNDERGROUND PUBLIC AND PRIVATE UTILITIES OR SUBSTRUCTURES SHOWN HEREON WERE OBTAINED FROM VISUAL INSPECTION, FIELD MEASUREMENTS, AND/OR AS-BUILT PLANS. THE LOCATIONS SHOWN HEREON ARE ONLY APPROXIMATE, AND ADDITIONAL UTILITY LINES NOT DISCOVERED, OR MARKED, DURING THE SEARCH OF RECORDS AND THE FIELD SURVEY MAY EXIST. ANY CONTRACTOR USING THE INFORMATION SHOWN HEREON IS HEREBY FOREWARNED THAT ANY EXCAVATION UPON THIS SITE MAY RESULT IN THE DISCOVERY OF ADDITIONAL UNDERGROUND UTILITIES NOT SHOWN HEREON. POB MAKES NO WARRANTY OF ANY KIND, EXPRESS OR IMPLIED, WITH RESPECT TO THE EXISTING UTILITIES SHOWN HEREON. PRIOR TO CONSTRUCTION, IT IS THE CONTRACTORS RESPONSIBILITY TO FIELD VERIFY LOCATIONS, DEPTHS, SIZES AND TYPES OF UNDERGROUND PUBLIC AND PRIVATE UTILITIES OR SUBSTRUCTURES WITHIN THE CONSTRUCTION LIMITS AND SHALL BRING FORWARD, IN WRITING TO THE ENGINEER OF RECORD, ALL DISCREPANCIES THAT DO NOT ALIGN WITH THE EXISTING CONDITIONS AS SHOWN HEREON.

KEYNOTES:

1	18" CONCRETE CURB & GUTTER	5 C200
2	18" CONCRETE CURB & GUTTER (REJECT)	5 C200
3	18" DRIVE-OVER CURB & GUTTER (REJECT)	6 C200
4	6" CURB TAPER SECTION	
5	STANDARD CURB TO REJECT CURB TRANSITION POINT	
6	DRIVE APRON	7 C200
7	PARKING LOT STRIPING	4 C200
8	DIRECTIONAL ARROW	3 C200
9	HANDICAP PARKING STALL ♿	4 C200
10	HANDICAP PARKING SIGN (WALL MOUNTED)	
11	STOP SIGN	
12	DOWEL CURBING TO EXISTING WITH 2-#5 AT 18". EMBEDDED 6" TYP.	
13	CONCRETE FLUME W/ RIP RAP	2 C300
14	INSTALL 8' TALL FENCE W/ PRIVACY SLATS	8 C200
15	INSTALL 16' CANTILEVER GATE W/ PRIVACY SLATS	3 C400
16	INSTALL 20' VEHICLE GATE W/ PRIVACY SLATS	5 C400
17	INSTALL SALVAGED "NO PARKING" SIGNS	
18	INSTALL "WEAVER CENTER" SIGN (BY OTHERS)	
19	INSTALL 5' PEDESTRIAN GATE W/ PRIVACY SLATS	6 C400
20	ADJUST CLEAN OUT TO GRADE	
21	INSTALL SALVAGED "BUS STOP" & "NO PARKING" SIGN	
22	30" CONCRETE CURB & GUTTER	6 C200

A02

PAVEMENT HATCH PATTERNS:

PROPOSED 4" ASPHALTIC CONCRETE PAVEMENT W/ 12" BASE COURSE	1 C200
PROPOSED 4" CONCRETE PAVEMENT	2 C200
PROPOSED 6" REINFORCED CONCRETE PAVEMENT	7 C200
PROPOSED LAWN SEED	
PROPOSED LACROSSE MICHIGAN GREEN SEED AREA	
PROPOSED "SANDBOX" AREA	5 C300
PROPOSED BIO-INFILTRATION BASIN	3 C500
PROPOSED MEDIUM RIPRAP	2 C300

A1

LANDSCAPE GENERAL NOTES:

1. 6" OF TOPSOIL SHALL BE PROVIDED IN ALL GENERAL LANDSCAPE AREAS. LANDSCAPE CONTRACTOR SHALL VERIFY THAT SPECIFIED PLANTING SOIL DEPTH IS PRESENT PRIOR TO PLANTING.
2. SEED/FERTILIZE/CRIMP HAY MULCH ALL GENERAL LANDSCAPE AREAS DISTURBED DURING CONSTRUCTION.
3. ALL PLANT MATERIALS LISTED SHALL MEET THE STANDARDS OF THE AMERICAN NURSERY & LANDSCAPE ASSOCIATION FOR THE SIZES GIVEN.
4. ALL TREES SHALL BE STAKED WITH A MINIMUM OF THREE STAKES.
5. CURV-RITE LANDSCAPE EDGING OR APPROVED EQUAL SHALL BE PLACED AROUND ALL LANDSCAPE BEDS.
6. 3" DEPTH OF SHREDDED HARDWOOD BARK MULCH SHALL BE PLACED IN ALL PLANTING BEDS.
7. 20-YEAR WEED BARRIER FABRIC SHALL BE PLACED BENEATH ALL BARK MULCH.
8. COORDINATE ALL LANDSCAPE WORK WITH GAS, ELECTRIC, (INCLUDING MAIN SERVICE, SITE LIGHTING, CONDUITS AND SIGNAGE) CABLE AND TELEPHONE CONSTRUCTION AND RESPECTIVE TRADES FOR THE INSTALLATION OF SAID UTILITIES.

PLANTING SCHEDULE:

SHRUBS SYMBOLS	BOTANICAL NAME	COMMON NAME	INSTALLATION SIZE	SIZE AT MATURITY	QUANTITY
CS	CORNUS SERICEA 'KELSEYI'	KELSEY'S DWARF RED-OSIER DOGWOOD	3 GAL.	24-30"T & W	19
ORNAMENTAL GRASS SYMBOLS	BOTANICAL NAME	COMMON NAME	INSTALLATION SIZE	SIZE AT MATURITY	QUANTITY
PV	PANICUM VIRGATUM 'SHENANDOAH'	SHENANDOAH SWITCH GRASS	2 GAL.	4'T X 2-3'W	16
PERENNIALS SYMBOLS	BOTANICAL NAME	COMMON NAME	INSTALLATION SIZE	SIZE AT MATURITY	QUANTITY
HR	HEMEROCALLIS X 'ROSY RETURNS'	ROSY RETURNS DAYLILY	1 GAL.	12-15"T X 10-12"W	11

A1

ARCHITECTURE
ENGINEERING
INTERIOR DESIGN

HSR ASSOCIATES INC.
100 MILWAUKEE STREET
LA CROSSE, WISCONSIN
PHONE: 608.784.1830
FAX: 608.782.5844
WEB SITE:
www.hsrassociates.com

Consultant:
Point of Beginning
Civil Engineering
Land Surveying
Landscape Architecture
5709 Windy Drive, Suite D
Stevens Point, WI 54482
715.344.9999(Ph) 715.344.9922(Fx)

Project Title: **WESTERN TECHNICAL COLLEGE APPRENTICESHIP CENTER**

Project Location: **2860 21ST PLACE SOUTH**
LA CROSSE, WI 54601

Sheet Title: **LANDSCAPE PLAN**
LAYOUT PLAN

HSR Project Number: **19021**

Project Date: **02-04-2020**

Drawn By: **AAS**

Key Plan:

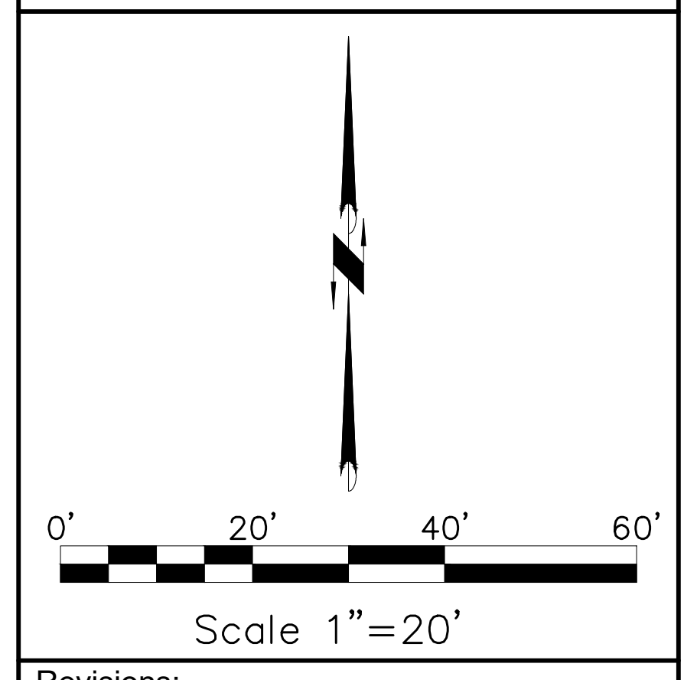
0'
20'
40'
60'
Scale 1"=20'

Revisions:
2/17/20 - ADDENDUM 1
2/25/20 - ADDENDUM 2

Graphic Scale: **1"=20'**

Last Update: **2/25/2020**

C200

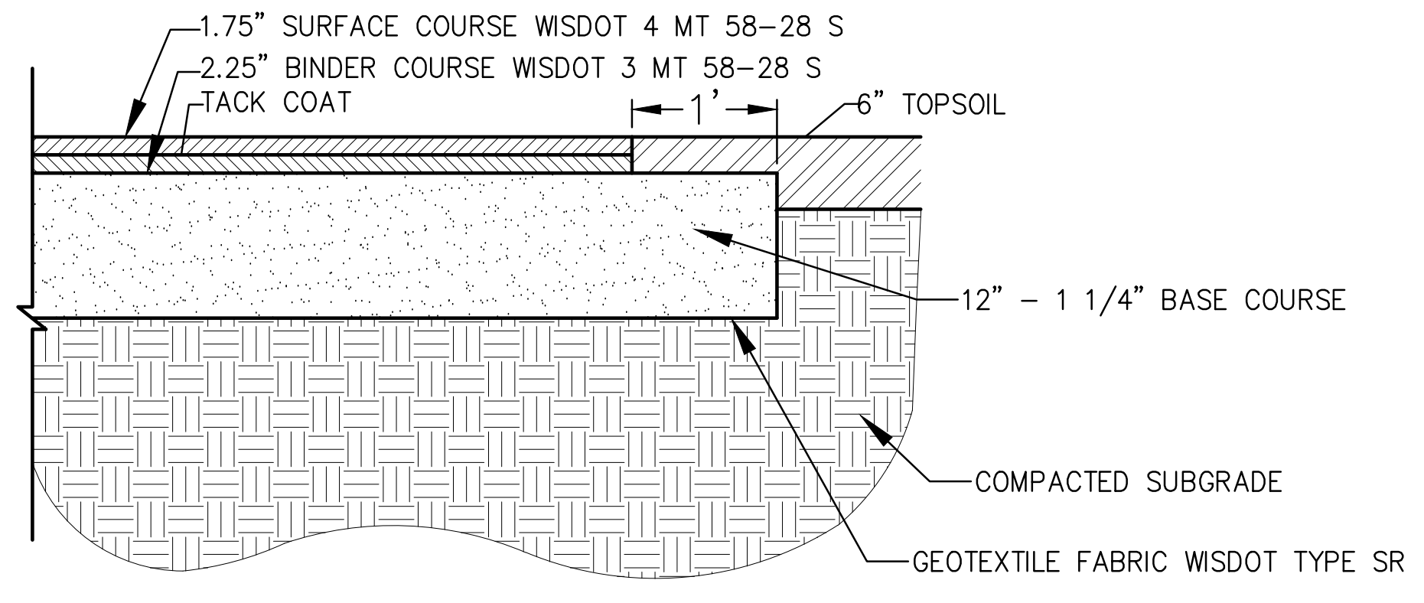
1.75" SURFACE COURSE WISDOT 4 MT 58-28 S
2.25" BINDER COURSE WISDOT 3 MT 58-28 S
TACK COAT
1'
6" TOPSOIL
12" - 1 1/4" BASE COURSE
COMPACTED SUBGRADE
GEOTEXTILE FABRIC WISDOT TYPE SR

4" ASPHALTIC PAVEMENT 1 C200

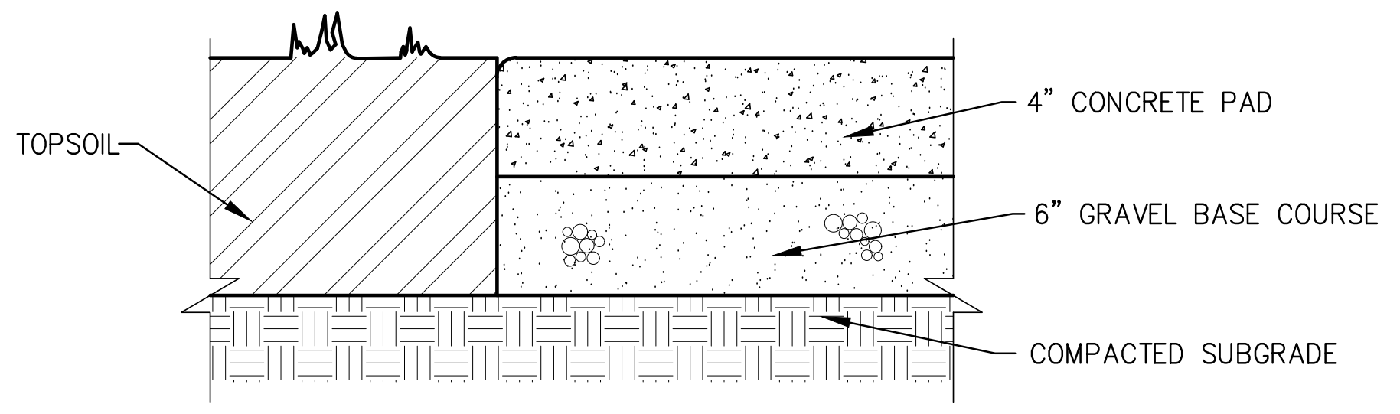
TOPSOIL
4" CONCRETE PAD
6" GRAVEL BASE COURSE
COMPACTED SUBGRADE

4" CONCRETE PAVEMENT 2 C200

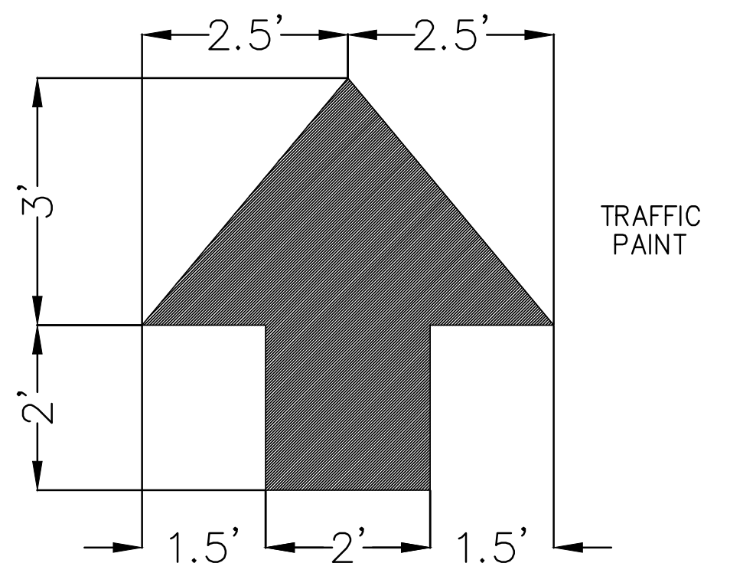
2.5'
2.5'
3'
2'
TRAFFIC PAINT
1.5'
2'
1.5'

DIRECTIONAL ARROWS 3 C200

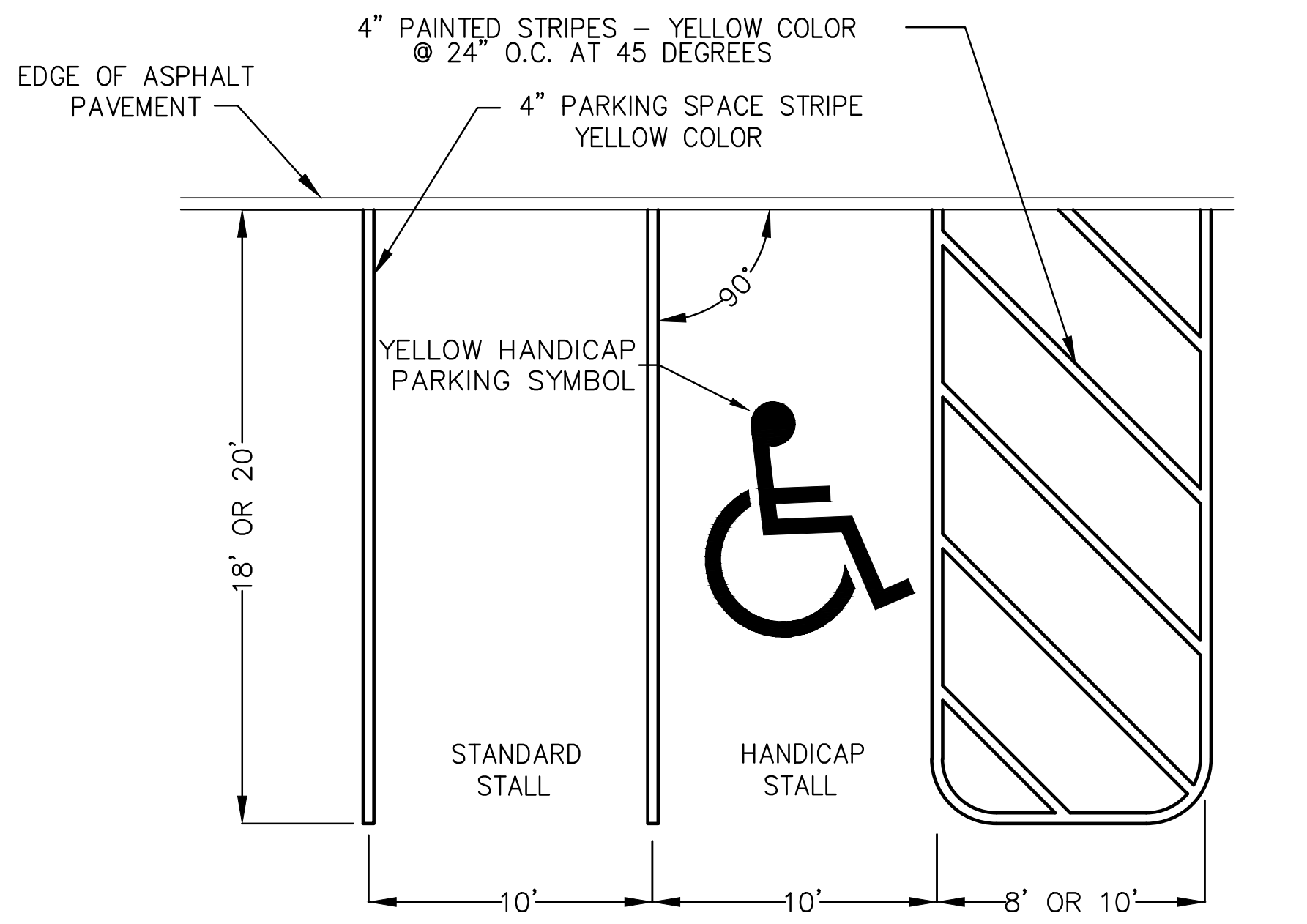
EDGE OF ASPHALT PAVEMENT
4" PAINTED STRIPES - YELLOW COLOR @ 24" O.C. AT 45 DEGREES
4" PARKING SPACE STRIPE YELLOW COLOR
90°
YELLOW HANDICAP PARKING SYMBOL
18' OR 20'
STANDARD STALL
HANDICAP STALL
10'
10'
8' OR 10'

90° PARKING LOT STRIPING 4 C200

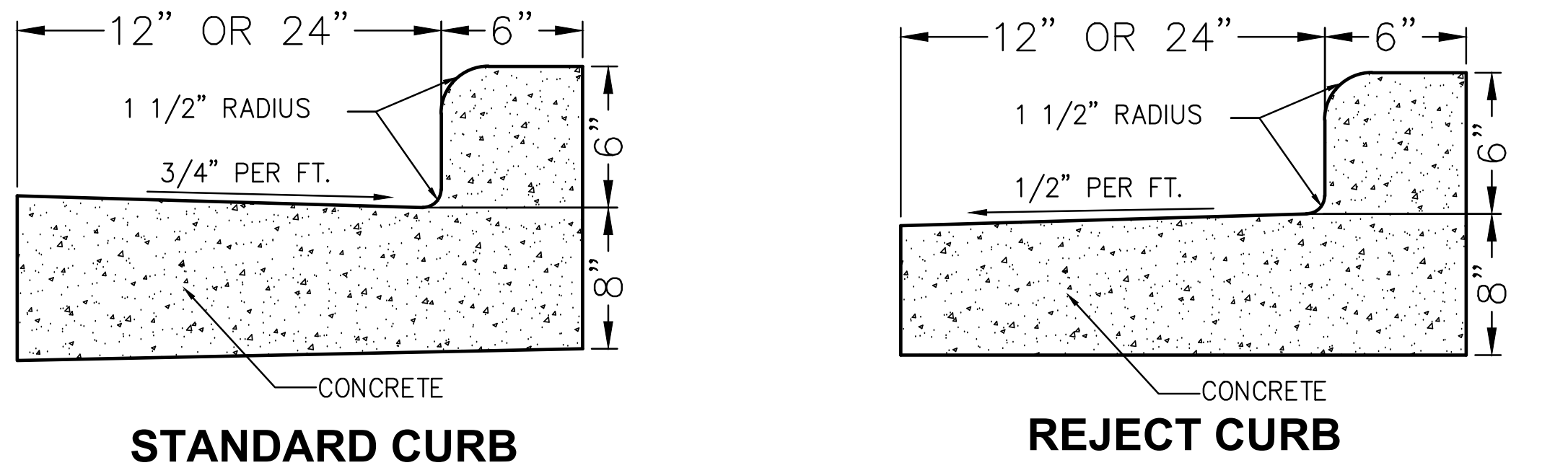
12" OR 24"
6"
1 1/2" RADIUS
3/4" PER FT.
6"
8"
CONCRETE
STANDARD CURB
12" OR 24"
6"
1 1/2" RADIUS
1/2" PER FT.
6"
8"
CONCRETE
REJECT CURB

CONCRETE CURB & GUTTER 5 C200

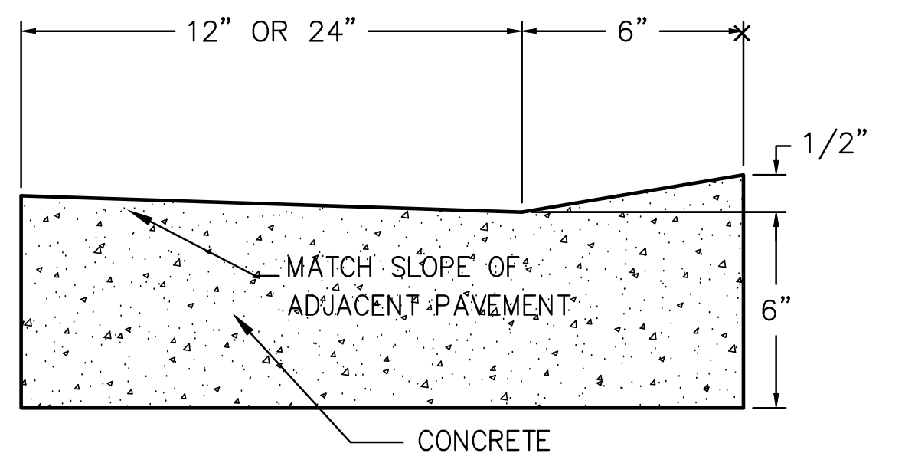
12" OR 24"
6"
1/2"
MATCH SLOPE OF ADJACENT PAVEMENT
6"
CONCRETE

DRIVE OVER CURB 6 C200

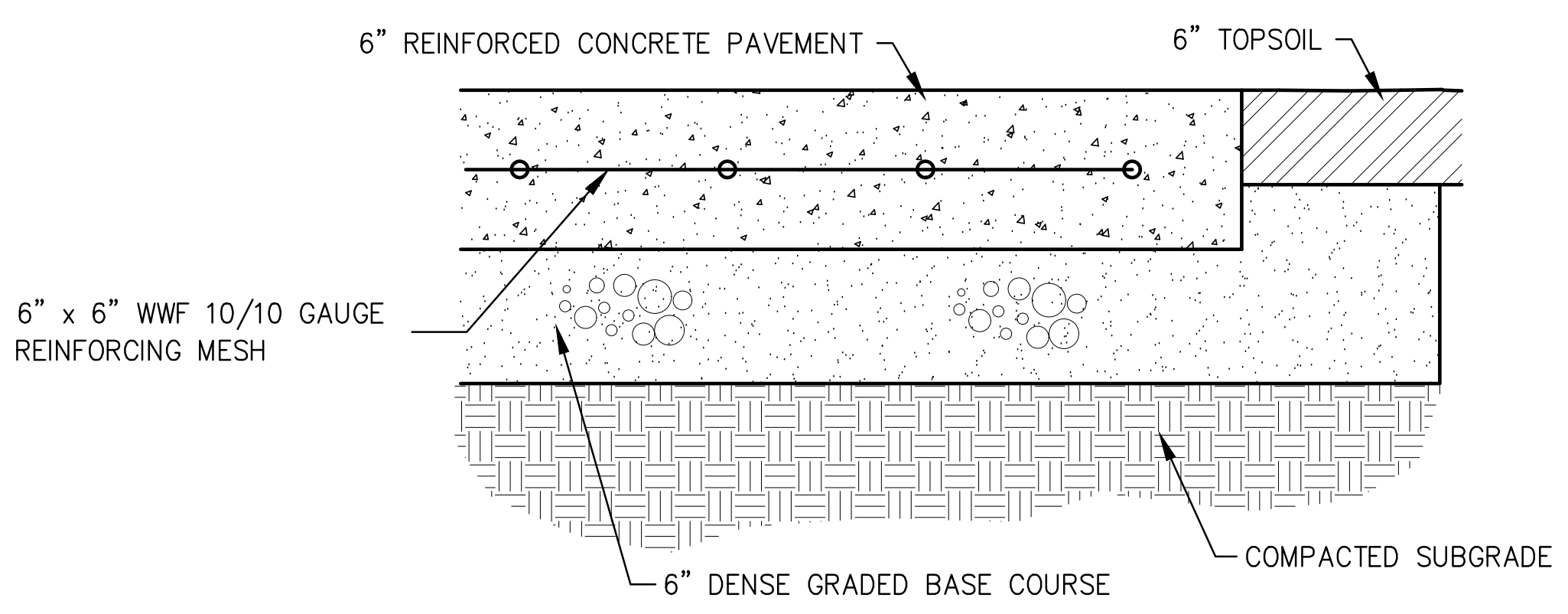
6" REINFORCED CONCRETE PAVEMENT
6" TOPSOIL
6" x 6" WWF 10/10 GAUGE REINFORCING MESH
6" DENSE GRADED BASE COURSE
COMPACTED SUBGRADE

REINFORCED CONCRETE 7 C200

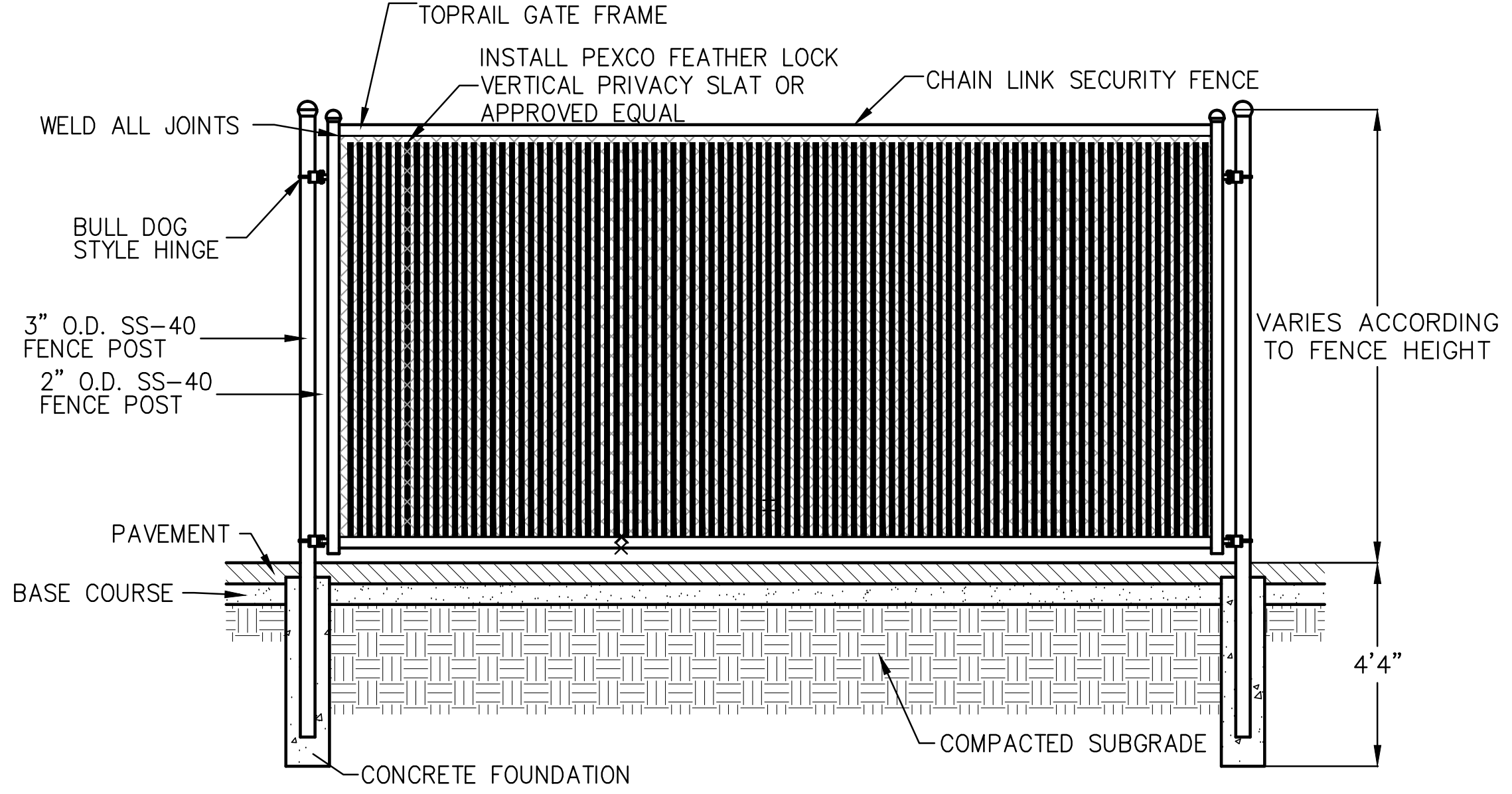
2" O.D. SS-40 TOPRAIL GATE FRAME
INSTALL PEXCO FEATHER LOCK VERTICAL PRIVACY SLAT OR APPROVED EQUAL
CHAIN LINK SECURITY FENCE
WELD ALL JOINTS
BULL DOG STYLE HINGE
3" O.D. SS-40 FENCE POST
2" O.D. SS-40 FENCE POST
VARIES ACCORDING TO FENCE HEIGHT
PAVEMENT
BASE COURSE
4'4"
COMPACTED SUBGRADE
CONCRETE FOUNDATION

CHAIN LINK PRIVACY FENCE 8 C200

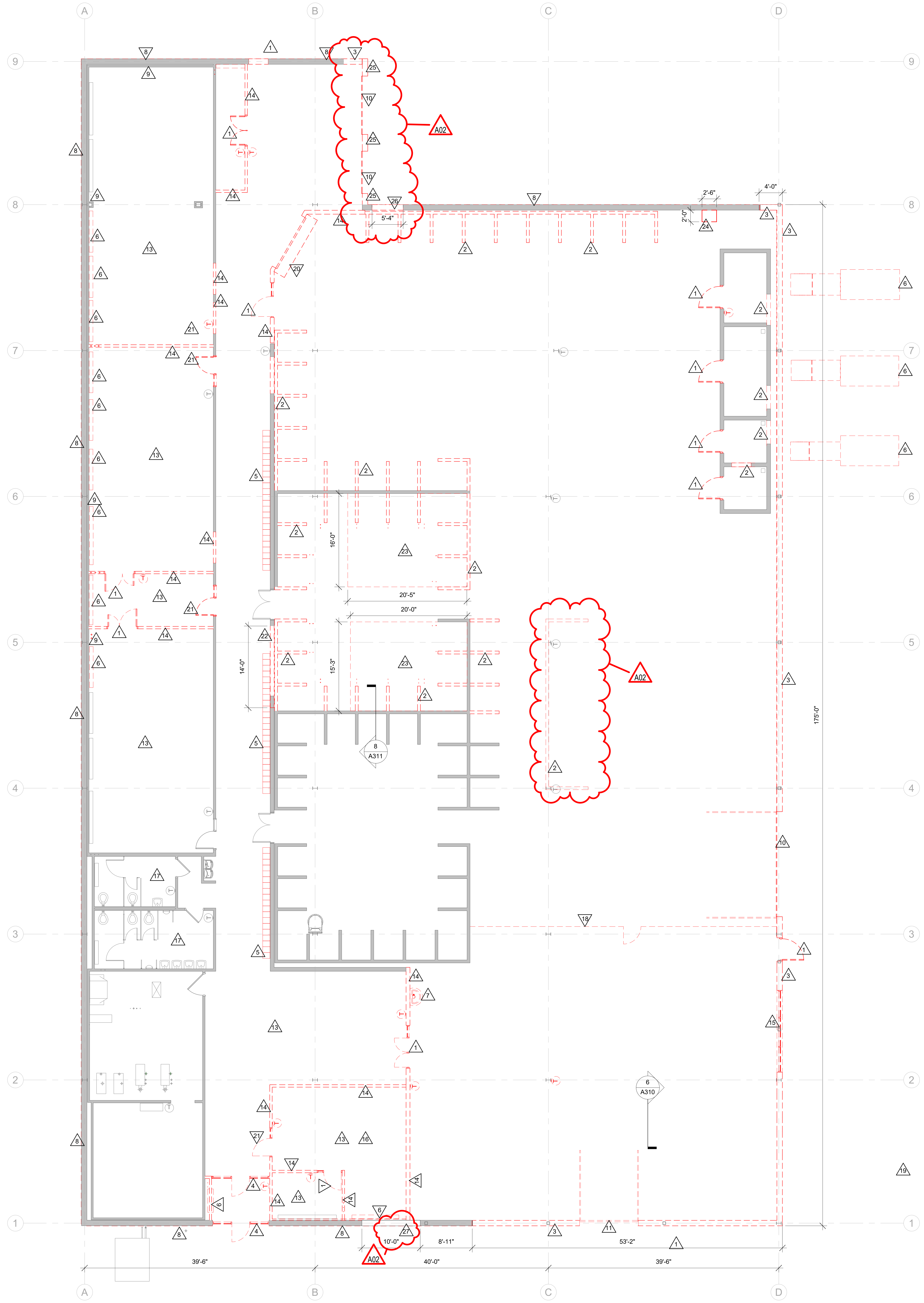

1 FIRST FLOOR DEMO PLAN

1/8" = 1'-0"

REMOVAL GENERAL NOTES:

A	ALL STRUCTURES SHOWN DASHED ON THIS PLAN SHALL BE COMPLETELY REMOVED FROM THE SITE AND DISPOSED OF BY THE CONTRACTOR UNLESS OTHERWISE NOTED. REFERENCE MEP SHEETS FOR ALL EQUIPMENT REMOVALS AND MODIFICATIONS. TIME AND METHODS SHALL BE COORDINATED WITH AND AGREED TO BY THE OWNER AND ARCHITECT. THIS SHALL INCLUDE ALL ELECTRICAL, MECHANICAL OR PLUMBING WITHIN THE REMOVED STRUCTURE. TERMINATE AND CAP MEP AS REQUIRED. DO NOT ABANDON IN PLACE UNUSED CONDUIT, PIPE, ETC. REMOVE COMPLETELY. VERIFY GENERAL CONDITIONS IN FIELD PRIOR TO BIDDING.
B	PREPARATION FOR NEW FINISHES SHALL INCLUDE BUT NOT LIMITED TO REMOVAL OF EXISTING FINISHES, REMOVAL OF TAPES, GLUES (MASTIC), NAILS, ETC. PATCHING OF HOLES AND CRACKS TO PROVIDE AN ACCEPTABLE SURFACE FOR NEW FINISH INSTALLATION.
C	OWNER WILL REMOVE LOOSE FURNISHINGS AND EQUIPMENT FROM THE WORK AREA PRIOR TO START OF CONSTRUCTION.
D	DELIVERY ROUTE AND TIMES FOR NEW MATERIALS AND EQUIPMENT SHALL BE COORDINATED WITH AND AGREED TO BY THE OWNER.
E	TEMPORARY UTILITIES ARE THE RESPONSIBILITY OF THE CONTRACTOR. ENSURE ADEQUATE LIGHTING, ETC. ALL REQUIRED SERVICES TO OTHER PARTS OF THE BUILDING SHALL BE MAINTAINED. COORDINATE ANY REQUIRED SHUTDOWNS OF POWER, COMMUNICATIONS, WATER, WASTE, HEATING OR VENTILATING WITH THE OWNER A MIN. OF 72 HOURS IN ADVANCE.
F	ROOM NUMBERS ARE SHOWN ON THIS PLAN FOR INFORMATIONAL AND COORDINATE PURPOSES ONLY.
G	CONTRACTOR SHALL BE RESPONSIBLE FOR ALL SHORING, BRACING, ETC. AS REQUIRED FOR THE WORK.
H	SEE MECHANICAL, PLUMBING AND ELECTRICAL SHEETS FOR ADDITIONAL REMOVAL NOTES AND ITEMS.
J	COORDINATE REMOVAL AND PATCHING WITH MEP DRAWINGS. PATCH TO MATCH EXISTING ADJACENT CONDITIONS.
K	BIDDERS SHALL MAKE EVERY EFFORT TO VERIFY EXISTING CONDITIONS PRIOR TO BIDDING. INSPECTION HOLES, ETC. CAN BE COORDINATED WITH THE OWNER.
L	COORDINATE STORAGE LOCATIONS FOR SALVAGED EQUIPMENT, ACCESSORIES, ETC. WITH THE OWNER. SALVAGED ITEMS SHALL BE PLACED AT A COMMON LOCATION INDICATED BY OWNER.
M	MATERIAL PENETRATIONS SHALL BE COMPLETED BY THE DISCIPLINE DOING THE WORK EXCEPT AS NOTED. ALL PATCH AND REPAIRS SHALL BE DONE BY QUALIFIED PERSONNEL TO ACCEPTABLE INDUSTRY STANDARDS.

REMOVAL PLAN LEGEND:

△	SYMBOL INDICATES CONSTRUCTION NOTE THIS SHEET
– – – –	REMOVE ITEMS NOTED WITH DASHED LINES
= = = =	SYMBOL INDICATES REMOVAL OF DOOR AND FRAME UNLESS NOTED OTHERWISE

KEY NOTES REMOVAL

1	REMOVE DOOR AND METAL FRAME
2	REMOVE MASONRY WALLS AND GRIND ANY VERTICAL REINFORCING TO BE FLUSH WITH THE FLOOR TO NOT CREATE A TRIPPING HAZARD
3	REMOVE EXTERIOR METAL PANEL, INSULATION AND METAL PARTS UP TO 13'-0" A.F.F
4	REMOVE ALUM STORE FRONT SYSTEM
5	REMOVE METAL LOCKERS AND BASE
6	REMOVE MECHANICAL UNIT - SEE MECHANICAL
7	REMOVE PLUMBING FIXTURE - SEE PLUMBING
8	REMOVE BOTTOM 4'-0" OF METAL PANEL, INSULATION AND ASSOCIATED FRAMING ON EXTERIOR WALL
9	REMOVE BOTTOM 4'-0" OF GYP. BOARD ON INTERIOR STUD WALL
10	REMOVE OVERHEAD DOOR AND SUPPORTS
11	REMOVE OVERHEAD SECTIONAL DOOR AND SUPPORTS. SALVAGE TO OWNER
13	REMOVE ACT CEILING AND LIGHTS
14	REMOVE GYP. BD WALLS
15	REMOVE WINDOW UNIT
16	REMOVE CARPETING AND VINYL WALL BASE - PREP FLOOR FOR NEW FINISH
17	REMOVE EXISTING CEILING TILES AND LIGHTS ONLY - GRID TO REMAIN
18	REMOVE EXISTING 8'-0"H CHAINLINK FENCE AND GATE
19	REMOVE CONCRETE PILLIONS FROM OLD CANOPY (NO LONGER EXISTING)
20	REMOVE OVERHEAD COILING DOOR AND SALVAGE TO OWNER
21	REMOVE DOOR AND METAL FRAME - STORE FOR REINSTALLATION
22	REMOVE PROTION OF EXISTING GYP. BD WALL UP TO 10'-0" A.F.F. FOR LENGTH NOTED ON PLAN
23	REMOVE PROTION OF EXISTING CONCRETE FLOOR
24	REMOVE PORTION OF EXISTING CONCRETE SLAB FOR CONDUIT INSTALLATION
25	REMOVE METAL PANEL, INSULATION AND ASSOCIATED FRAMING UP TO UNDERSIDE OF ROOF SOFFIT.
26	REMOVE PORTION OF EXTERIOR WALL TO CREATE OPENING FOR NEW ALUM ENTRANCE FRAME.
27	REMOVE PORTION OF EXTERIOR WALL UP TO 12'-0" TO INSTALL SUPPORT FRAMING FOR FUTURE OVERHEAD DOOR INSTALLATION. VERIFY HEIGHT OF OPENING WITH OWNER.

A02
A02
A02
A02

ARCHITECTURE
ENGINEERING
INTERIOR DESIGN

HSR ASSOCIATES INC.
100 MILWAUKEE STREET
LA CROSSE, WISCONSIN
PHONE: 608.784.1830
FAX: 608.782.5844
www.hsrassociates.com

Consultant:

Project Title: **WESTERN TECHNICAL COLLEGE APPRENTICESHIP CENTER REMODEL**

Project Location: **2860 21ST PL S**
LA CROSSE, WI 54601

Sheet Title: **REMOVAL**

HSR Project Number:
19021

Project Date:
FEBRUARY 2020

Drawn By:
M.MALAND

Key Plan:

Revisions:

No.	Description	Date
A02	ADDENDUM #2	02/25/2020

Graphic Scale:
VARIES

Last Update:
2/24/2020 2:55:14 PM

A090

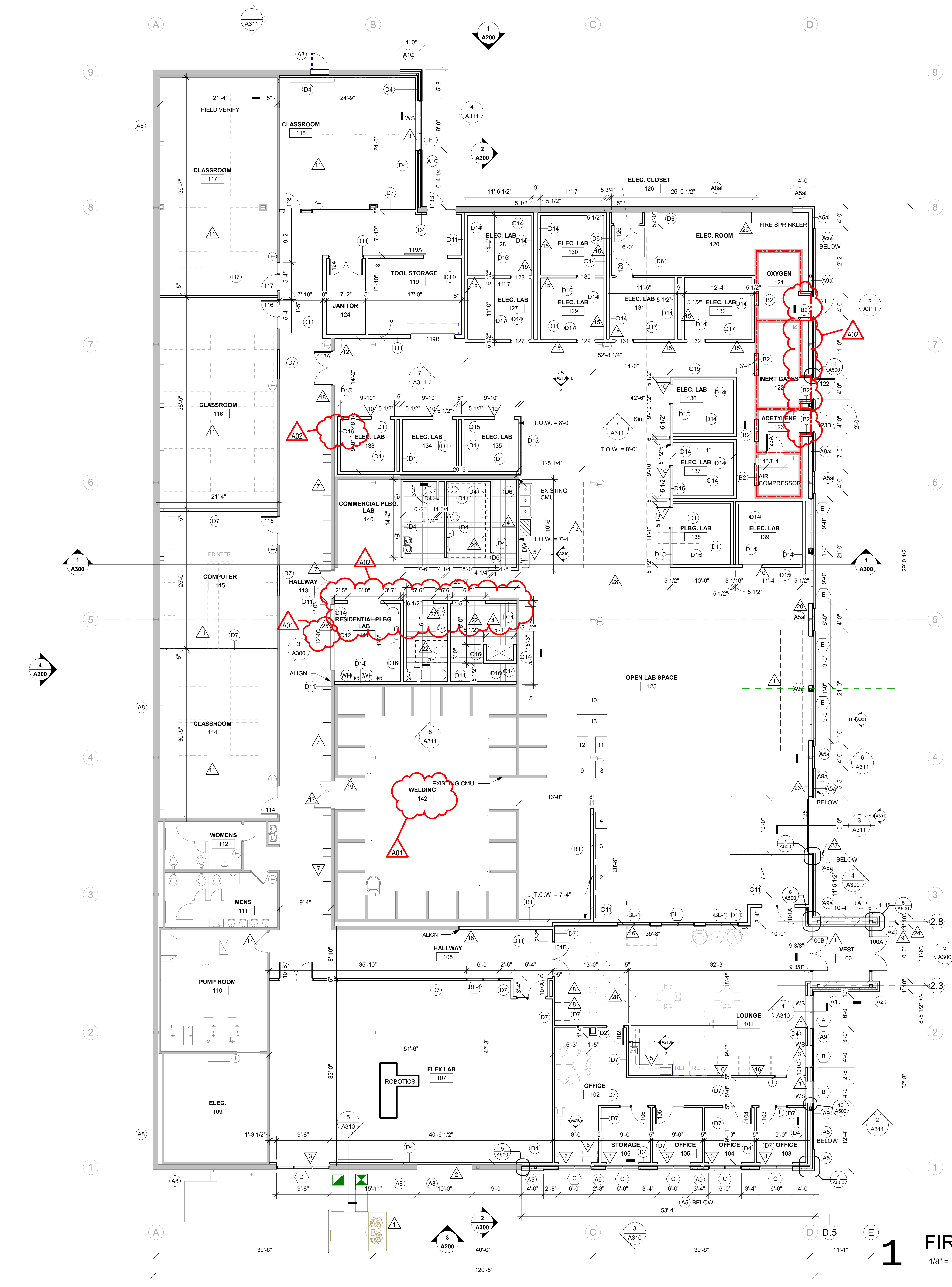
CLASSROOM 118
CLASSROOM 117
FIELD VERIFY
TOOL STORAGE 119
JANITOR 124
ELEC. CLOSET 126
ELEC. LAB 128
ELEC. LAB 130
ELEC. ROOM 120
FIRE SPRINKLER
ELEC. LAB 127
ELEC. LAB 129
ELEC. LAB 131
ELEC. LAB 132
OXYGEN 121
INERT GASES 122
ACETYLENE 123
AIR COMPRESSOR
CLASSROOM 116
ELEC. LAB 133
ELEC. LAB 134
ELEC. LAB 135
ELEC. LAB 136
ELEC. LAB 137
COMMERCIAL PLBG. LAB 140
EXISTING CMU
PLBG. LAB 138
ELEC. LAB 139
COMPUTER 115
PRINTER
HALLWAY 113
RESIDENTIAL PLBG. LAB
OPEN LAB SPACE 125
CLASSROOM 114
WELDING 142
EXISTING CMU
WOMENS 112
MENS 111
HALLWAY 108
PUMP ROOM 110
FLEX LAB 107
ROBOTICS
ELEC. 109
LOUNGE 101
VEST 100
OFFICE 102
STORAGE 106
OFFICE 105
OFFICE 104
OFFICE 103
A01
A02
120'-5"

1 FIRST FLOOR REMODEL PLAN

1/8" = 1'-0"

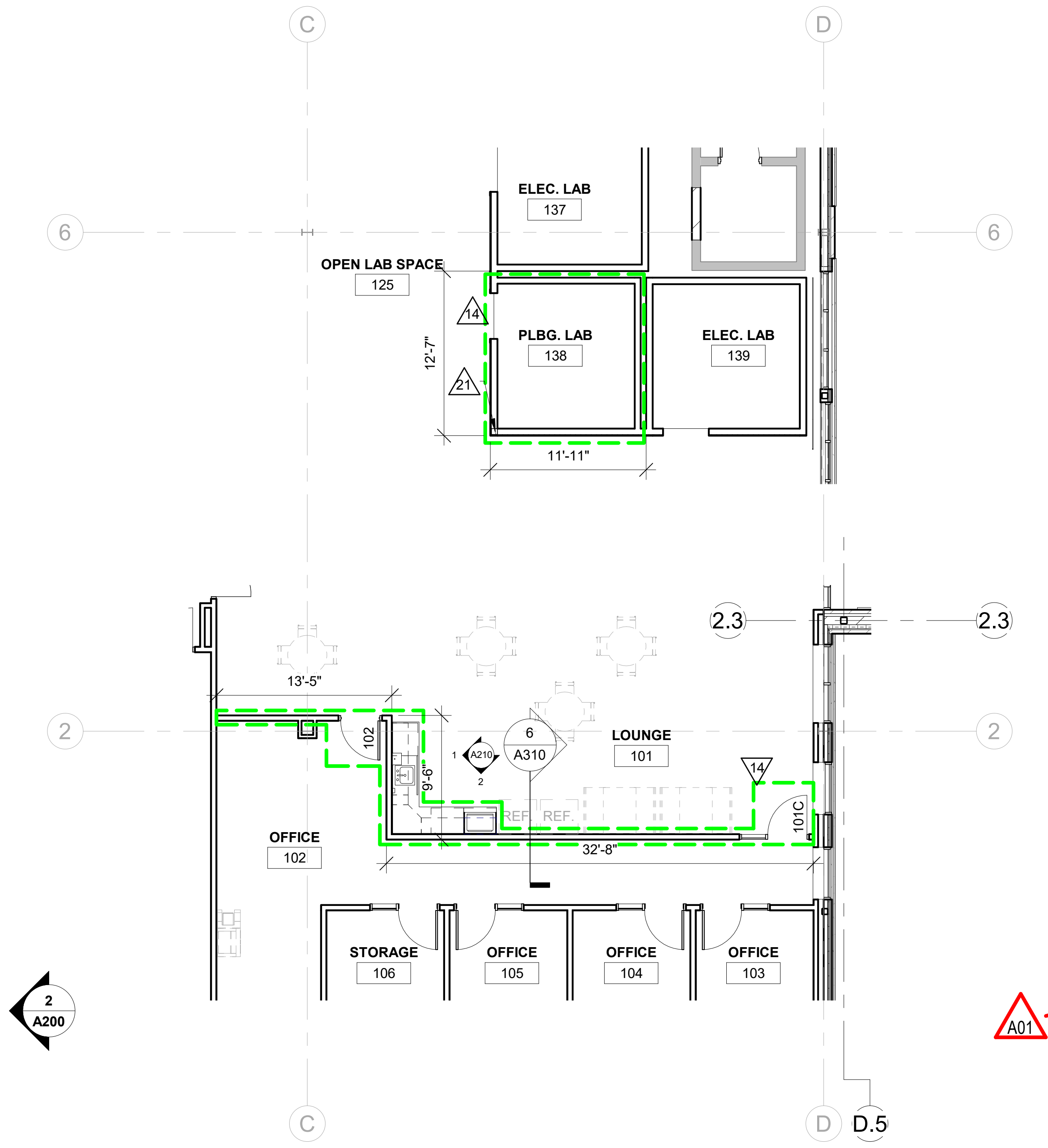
ELEC. LAB 137
OPEN LAB SPACE 125
PLBG. LAB 138
ELEC. LAB 139
LOUNGE 101
OFFICE 102
STORAGE 106
OFFICE 105
OFFICE 104
OFFICE 103

3 ALTERNATE PLAN

1/8" = 1'-0"

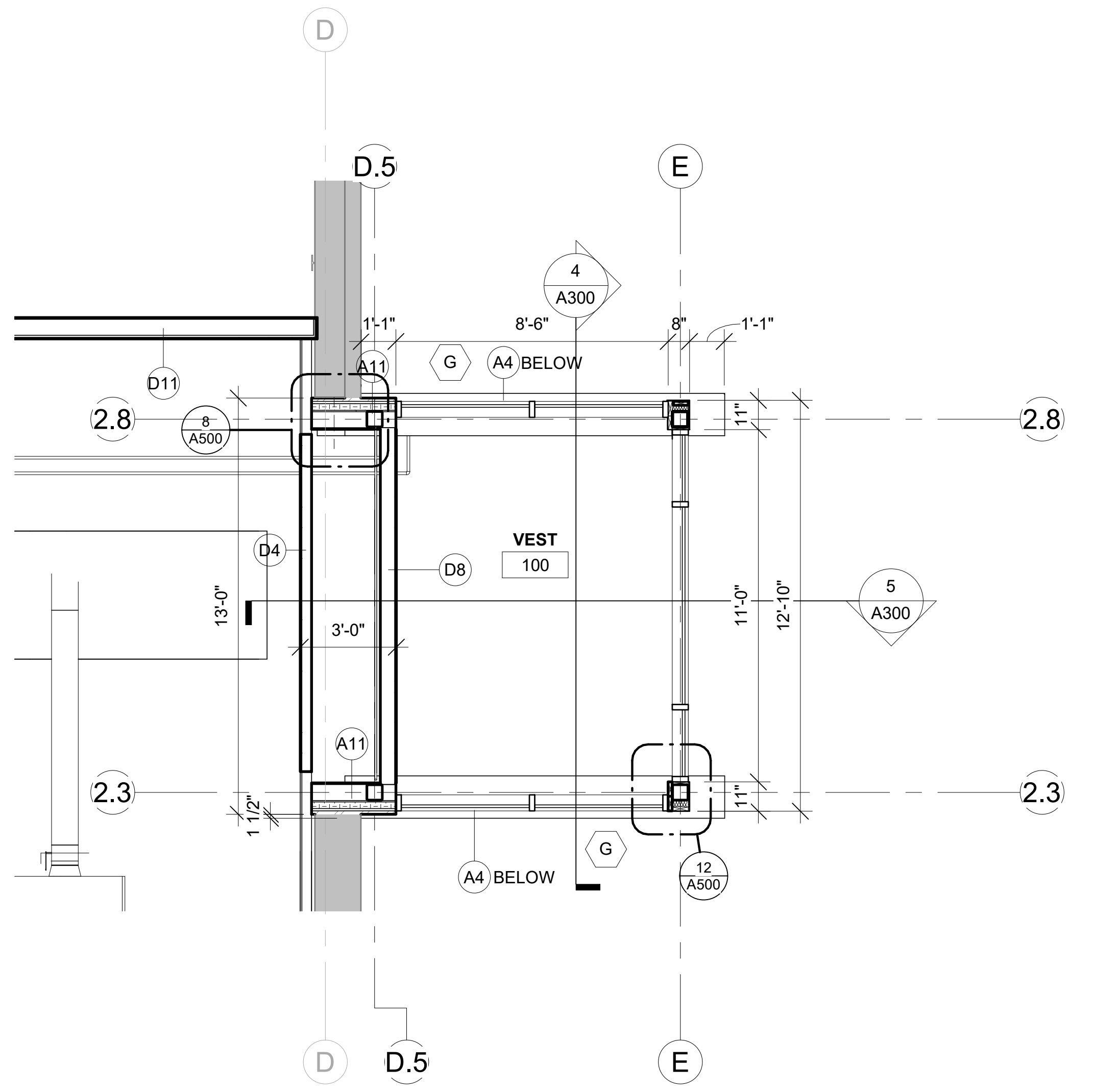
VEST 100
D.5
E
2.8
2.3
A4 BELOW

2 UPPER VESTIBULE PLAN

1/4" = 1'-0"

OWNER EQUIPMENT LIST

1. MARVEL BAND SAW
2. DAKE PRESS
3. DAKE PRESS
4. BVA PRESS
5. BRIDGE PORT MILL
6. SAND BLAST CABINET
7. LATHE
8. LARGE PEDESTAL GRINDER
9. SMALL PEDESTAL GRINDER
10. IRON WORKES
11. NEW DRILL PRESS
12. OLD DRILL PRESS
13. ELLIS BANDSAW

GENERAL NOTES:

A	SEE ID SHEETS FOR FLOOR AND WALL FINISH LAYOUTS.
B	LOOSE FURNISHINGS EXCEPT AS NOTED SHALL BE PROVIDED AND INSTALLED BY THE OWNER.
C	VERIFY EXACT SIZE AND LOCATION OF ALL MECHANICAL / PLUMB AND ELEC. OPENINGS - GENERAL CONTRACTOR SHALL BE RESPONSIBLE FOR FINISH AT ALL VISIBLE AREAS. ALL OPENING SHALL BE SEALED AFTER UTILITY INSTALLATION.
D	PAINT ALL EXPOSED STEEL LINTELS.
E	INSTALL BULLNOSE CMU AT ALL OUTSIDE CORNERS W/O TILE AND AT DOOR JAMBS AS DETAILED. NO BULLNOSE AT WINDOW JAMBS.
F	SEE STRUCTURAL FOR SLAB CONTROL JOINTS.
G	CLEAN AND PAINT ALL EXISTING DOORS NOT BEING REPLACED DURING THE PROJECT.
H	REFER TO OVERALL PLANS FOR FIRE RATING LOCATIONS AND ACCESSIBILITY ROUTES.
J	EXTEND ALL WALLS TO DECK UNLESS NOTED OTHERWISE. SEE **A501** FOR TOP OF WALL DETAILS.
K	UNLESS NOTED OTHERWISE RESTROOM FLOORS SHALL BE SLOPED A MIN. 1/16" : 12" TO FLOOR DRAINS - TO "CENTER", IF NO FLOOR DRAINS.
L	FIXED EQUIPMENT IS SHOWN ON THIS PLAN FOR COORDINATION.
M	GEN. CONTRACTOR TO PROVIDE CONC. EQUIP. PADS/CURBS AS REQUIRED FOR MECH/ELECTRICAL EQUIP. - VERIFY SIZE/PROFILE/LOCATION WITH MECH/ELECTRICAL.
N	

LEGEND:

Ⓐ	SYMBOL INDICATES WALL TYPE - SEE SHEET A600 FOR WALL TYPE DETAILS.
⬡ A	SYMBOL INDICATES WINDOW TYPE. SEE SHEET A601 FOR WINDOW FRAME ELEVATIONS.
△	SYMBOL INDICATES CONSTRUCTION NOTE THIS SHEET
WS	WINDOW SHADES

KEY NOTES PLAN

1	MECHANICAL EQUIPMENT - SEE MECH.
2	FRAME OPENING FOR INSTALL OF OVERHEAD DOOR IN THE FUTURE - INFILL OPENIGN WITH WALL TYPE A8 AND MATCH ADJ. METAL PANEL PROFILES. SIMILAR STRUCTURAL FRAMING AS OTHER OVERHEAD DOOR - SEE STRUCTURAL
3	SOLID SURFACE WINDOW STOOLS
4	FIBERGLASS FLOOR GRATING ON WOOD FLOOR JOISTS - SEE STRUCTURAL
5	PLAM CASEWORK - SEE ELEVATIONS ON A210
6	NOT USED
7	18"Wx18"Dx74"H - PLASTIC LOCKERS ON A 4" CONCRETE BASE
8	VENDING MACHINES - NIC
9	CONCRETE STOOP - SEE STRUCTURAL
10	1x4 MANUFACTURED TRIM AROUND FRAMED OPENINGS
11	FURNITURE SHOWN FOR REFERENCE ONLY - NIC
12	PPE CABINET - NIC
13	RECESSED UNISTRUT INTO CONCRETE FLOOR
14	ALTERNATE DIRTT WALL SYSTEM INCLUDES ALL DIVISIONS OF WORK. INCLUDING DOOR, CASEWORK, ETC. DOOR HARDWARE TO BE PROVIDED BY 08 71 00. SEE SHEETS DW-101 & DW-201
15	TOP OF WALL @ 9'-6" A.F.F.
16	BACKING REQUIRED IN WALL FOR TABLE MOUNTING - 4'-0"x8'-0" SHEET METAL BEHING DRYWAYLL - VEIRY PLACEMENT OF TABLES WITH OWNER
17	CLEAN AND REPAINT EXISTING HM DOORS AND FRAMES
18	FIRE EXTINGUISHER CABINET - RECESSED IN WALL
19	EXISTING BRACKET MOUNTED FIRE EXTINGUISHER TO REMAIN
20	BRACKET MOUNTED FIRE EXTINGUISHER
21	6"x6" (NOM.) WOOD COLUMN. TOP @ 8'-0" IN CORNER REQ. W/ DOUBLE 2x4 HEADERS FROM COLUMN TO EACH CORNER TO SUPPORT ROOF STRUCTURE ABOVE IF ALTERNATE IS ACCEPTED
22	REMOVABLE PROTION OF FIBERGLASS GRATING
23	CONCRETE BOLLARD - SEE SPEC
24	POST FOR AUTO OPERATOR PUSH BUTTON
25	D12 TO EXTEND 10'-0" A.F.F. - SEAL PERIMETER - HORIZONTAL JOINT ALLOWED @ 2'-0" A.F.F. IF REQUIRED
26	3 1/2" THICK CONCRETE EQUIP. PAD - COORDINATE W/ ELEC.
27	PLASTIC LAMINATE COUNTERTOP W/ BACKSPLASH. MOUNTED @ 2'-10" A.F.F. WITH BLACK COUNTER TOP SUPPORT BRACKETS
28	REQUIRED FLOOR TRENCHING TO BE DONE BY G.C. - COORDINATE W/ PLBG.

A01

ARCHITECTURE
ENGINEERING
INTERIOR DESIGN

HSR ASSOCIATES INC.
100 MILWAUKEE STREET
LA CROSSE, WISCONSIN
PHONE: 608.784.1830
FAX: 608.782.5844
www.hsrassociates.com

Consultant:

Project Title: **WESTERN TECHNICAL COLLEGE**
APPRENTICESHIP CENTER REMODEL

Project Location: **2860 21ST PL S**
LA CROSSE, WI 54601

Sheet Title: **FIRST FLOOR REMODEL PLAN**

HSR Project Number:
19021

Project Date:
FEBRUARY 2020

Drawn By:
M.MALAND

Key Plan:

Revisions:

No.	Description	Date
A01	ADDENDUM #1	02/17/2020
A02	ADDENDUM #2	02/25/2020

Graphic Scale:
VARIES

Last Update:
2/24/2020 10:36:47 AM

A100

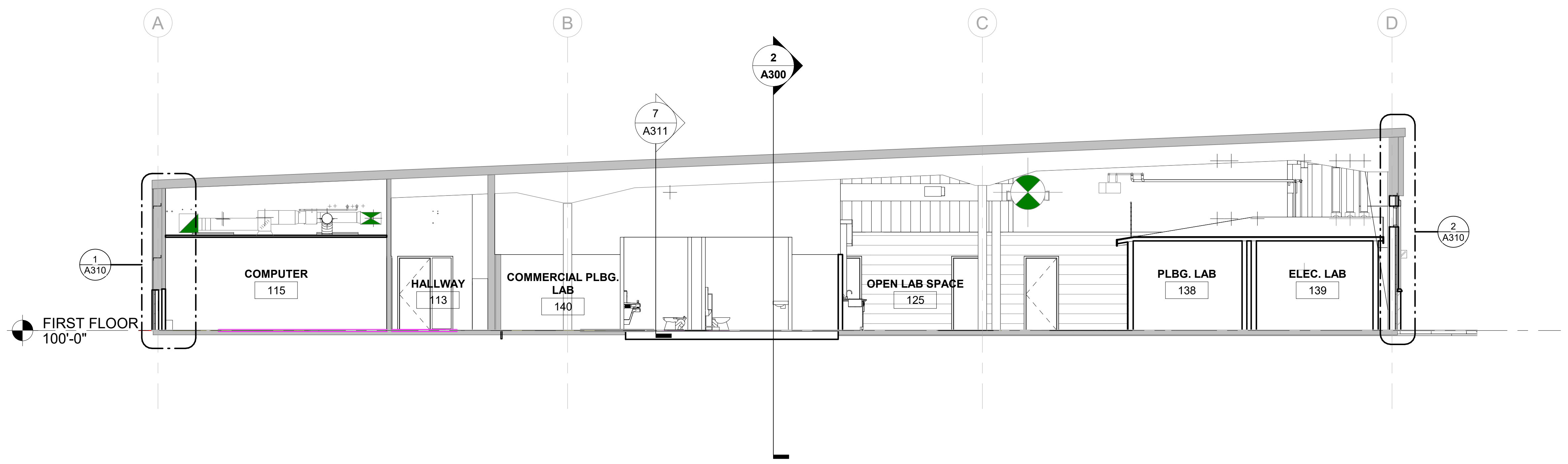
A
B
C
D
2
A300
7
A311
1
A310
2
A310
COMPUTER
115
HALLWAY
113
COMMERCIAL PLBG. LAB
140
OPEN LAB SPACE
125
PLBG. LAB
138
ELEC. LAB
139
FIRST FLOOR
100'-0"

1 BUILDING SECTION
1/8" = 1'-0"

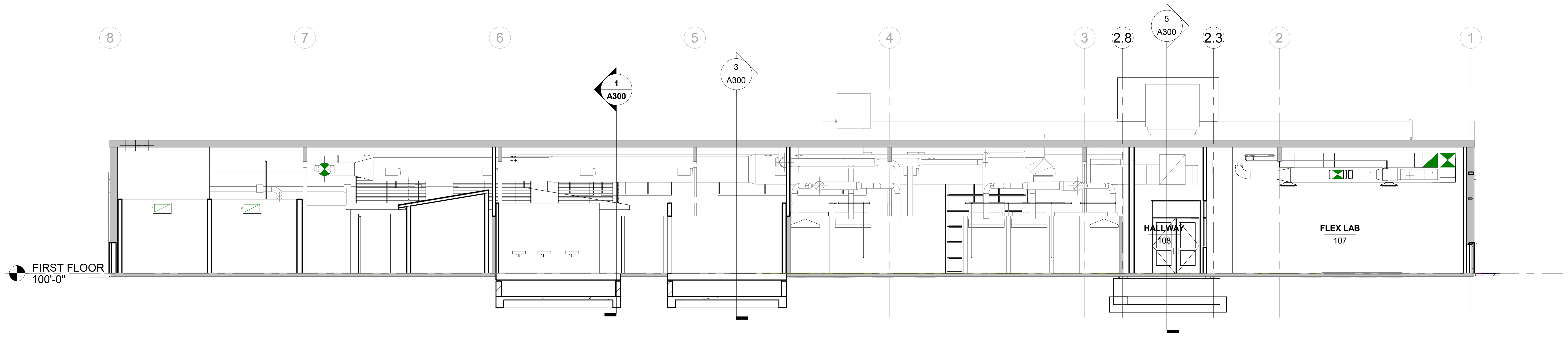
8
7
6
5
4
3
2.8
2.3
2
1
5
A300
1
A300
3
A300
HALLWAY
108
FLEX LAB
107
FIRST FLOOR
100'-0"

2 BUILDING SECTION
1/8" = 1'-0"

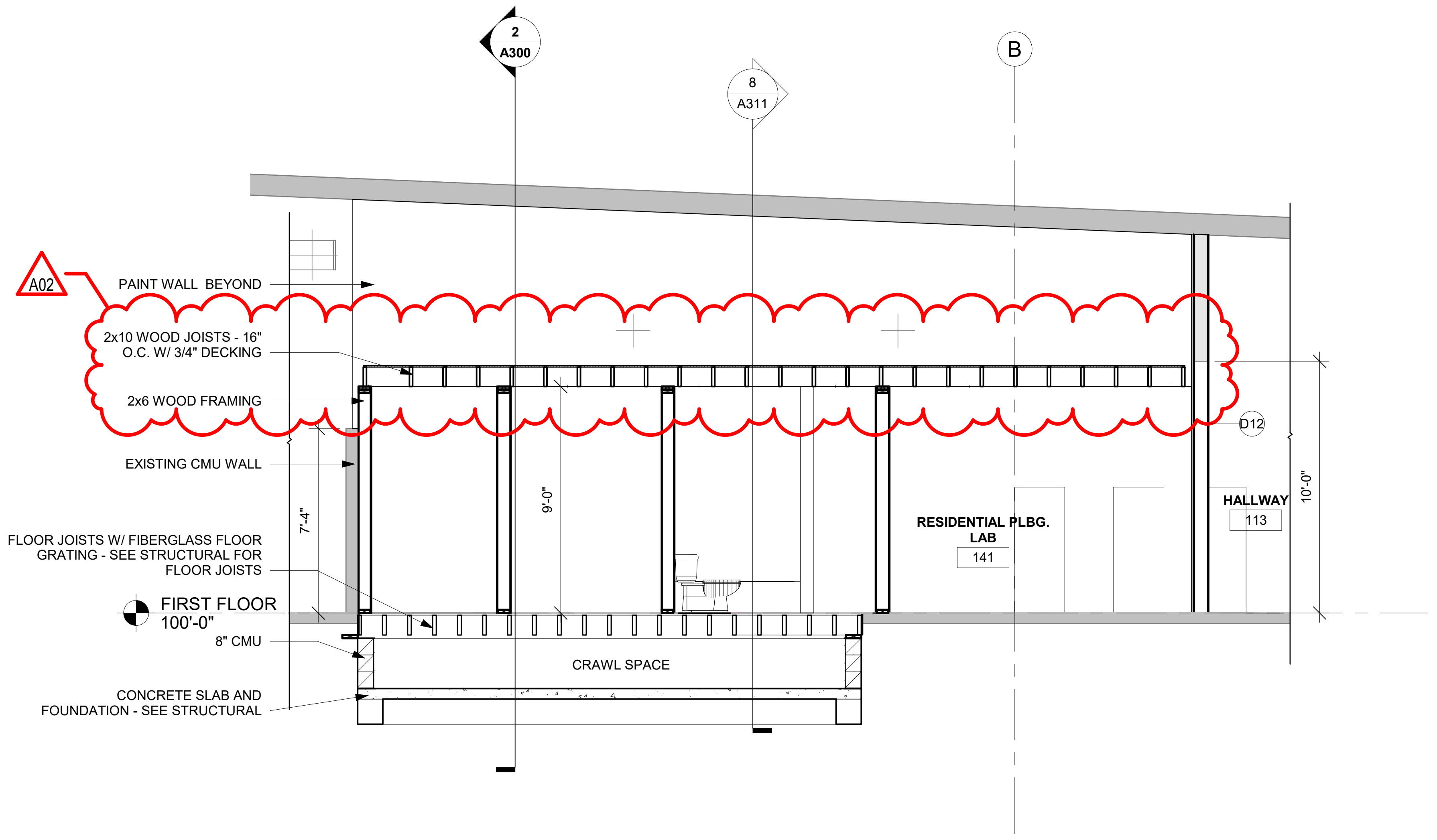
2
A300
8
A311
B
A02
PAINT WALL BEYOND
2x10 WOOD JOISTS - 16" O.C. W/ 3/4" DECKING
2x6 WOOD FRAMING
EXISTING CMU WALL
FLOOR JOISTS W/ FIBERGLASS FLOOR GRATING - SEE STRUCTURAL FOR FLOOR JOISTS
FIRST FLOOR
100'-0"
8" CMU
CONCRETE SLAB AND FOUNDATION - SEE STRUCTURAL
7'-4"
9'-0"
10'-0"
D12
CRAWL SPACE
RESIDENTIAL PLBG. LAB
141
HALLWAY
113

3 BUILDING SECTION
1/4" = 1'-0"

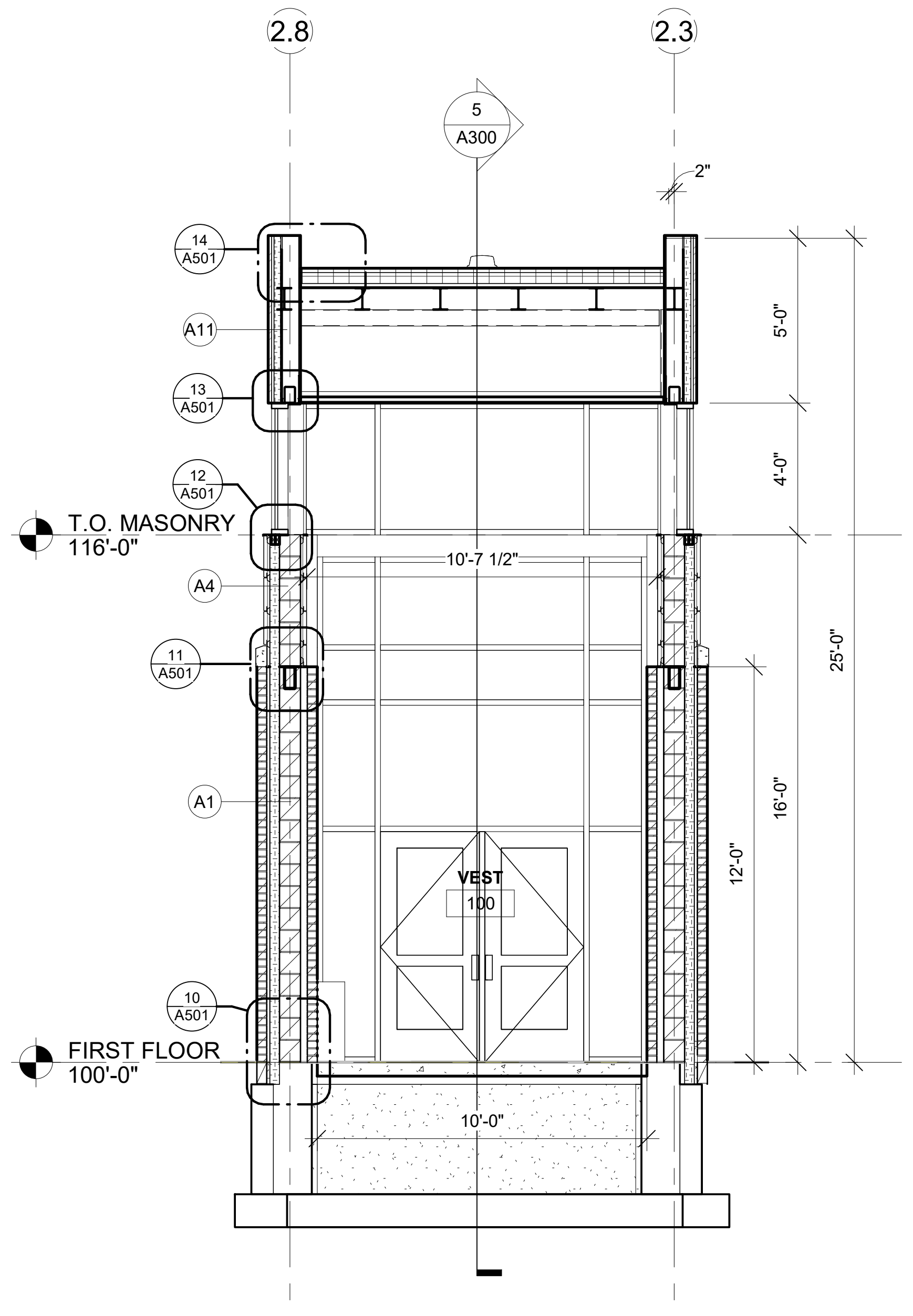
2.8
2.3
5
A300
2"
14
A501
A11
13
A501
12
A501
A4
11
A501
A1
10
A501
T.O. MASONRY
116'-0"
FIRST FLOOR
100'-0"
10'-7 1/2"
5'-0"
4'-0"
25'-0"
16'-0"
12'-0"
VEST
100
10'-0"

4 TOWER SECTION
1/4" = 1'-0"

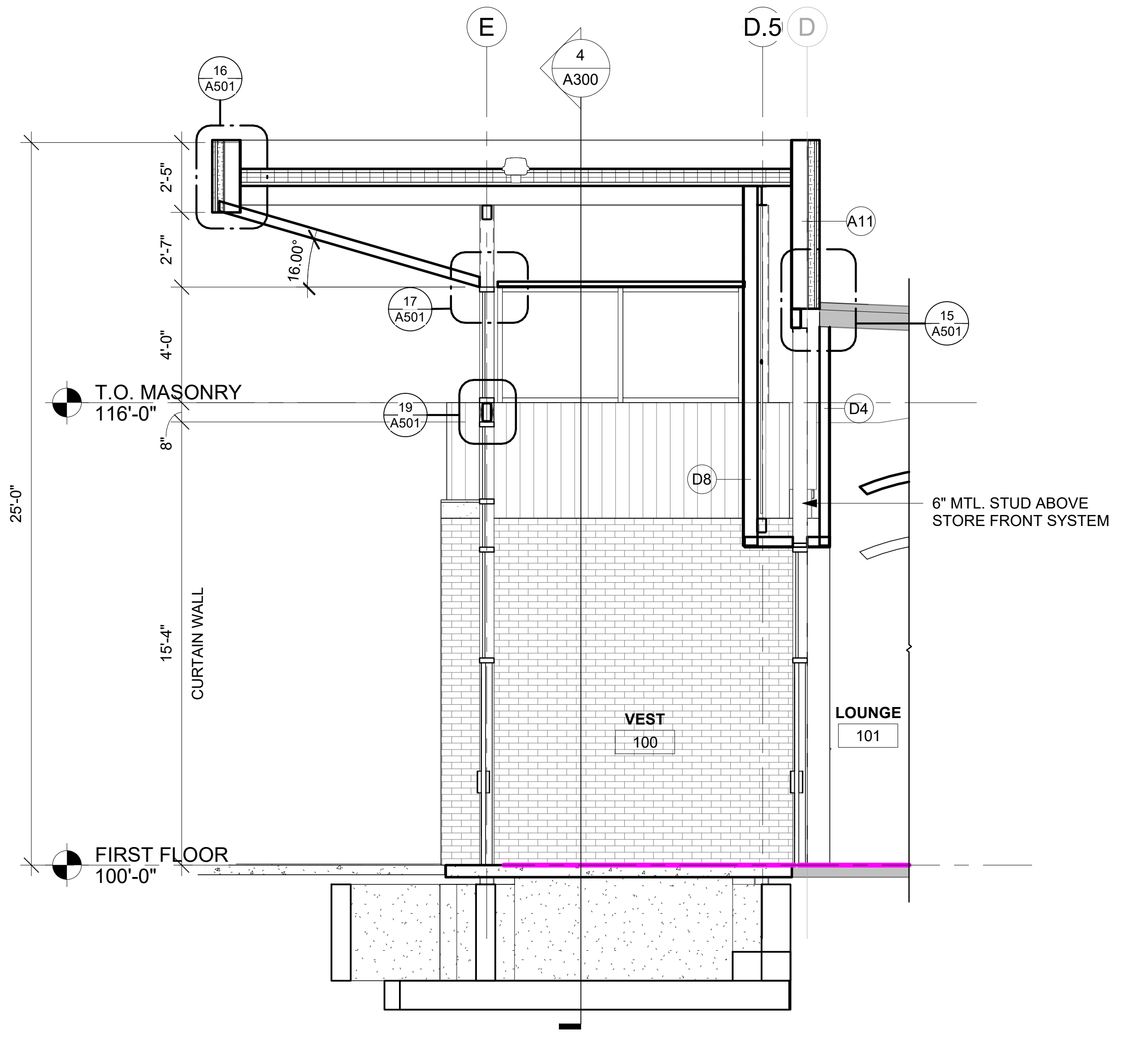
E
D.5
D
4
A300
16
A501
17
A501
19
A501
15
A501
A11
D4
D8
2'-5"
2'-7"
4'-0"
8"
15'-4"
25'-0"
16.00°
CURTAIN WALL
T.O. MASONRY
116'-0"
FIRST FLOOR
100'-0"
6" MTL. STUD ABOVE STORE FRONT SYSTEM
VEST
100
LOUNGE
101

5 TOWER SECTION
1/4" = 1'-0"

ARCHITECTURE
ENGINEERING
INTERIOR DESIGN

HSR ASSOCIATES INC.
100 MILWAUKEE STREET
LA CROSSE, WISCONSIN
PHONE: 608.784.1830
FAX: 608.782.5844
www.hsrassociates.com

Consultant:

Project Title: **WESTERN TECHNICAL COLLEGE APPRENTICESHIP CENTER REMODEL**

Project Location: **2860 21ST PL S LA CROSSE, WI 54601**

Sheet Title: **BUILDING SECTIONS**

HSR Project Number: **19021**

Project Date: **FEBRUARY 2020**

Drawn By: **M.MALAND**

Key Plan:

Revisions:

No.	Description	Date
A02	ADDENDUM #2	02/25/2020

Graphic Scale: **VARIES**

Last Update: **2/24/2020 10:33:11 AM**

A300

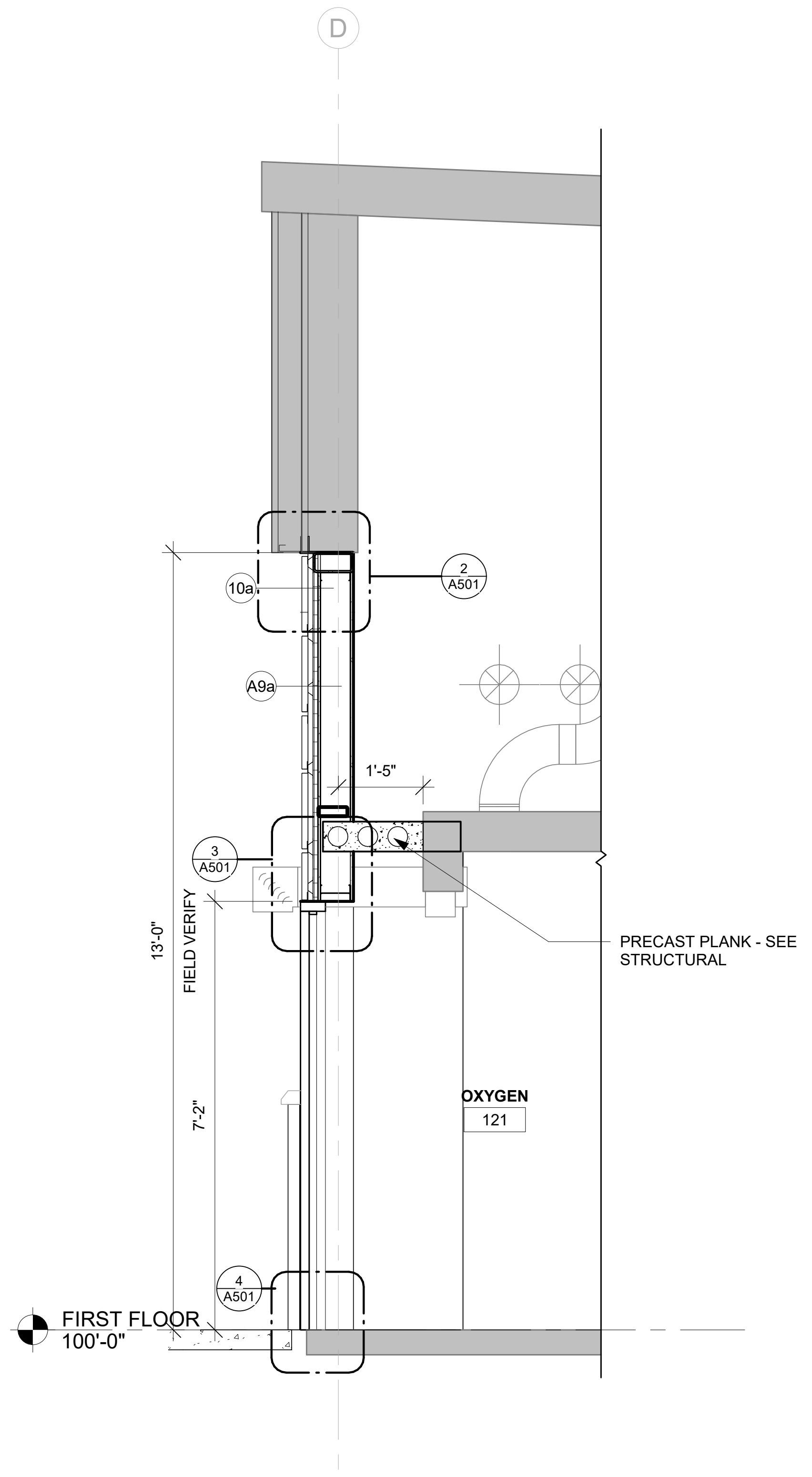
D
10a
2
A501
A9a
1'-5"
3
A501
PRECAST PLANK - SEE
STRUCTURAL
13'-0"
FIELD VERIFY
7'-2"
OXYGEN
121
4
A501
FIRST FLOOR
100'-0"

5 WALL SECTION
1/2" = 1'-0"

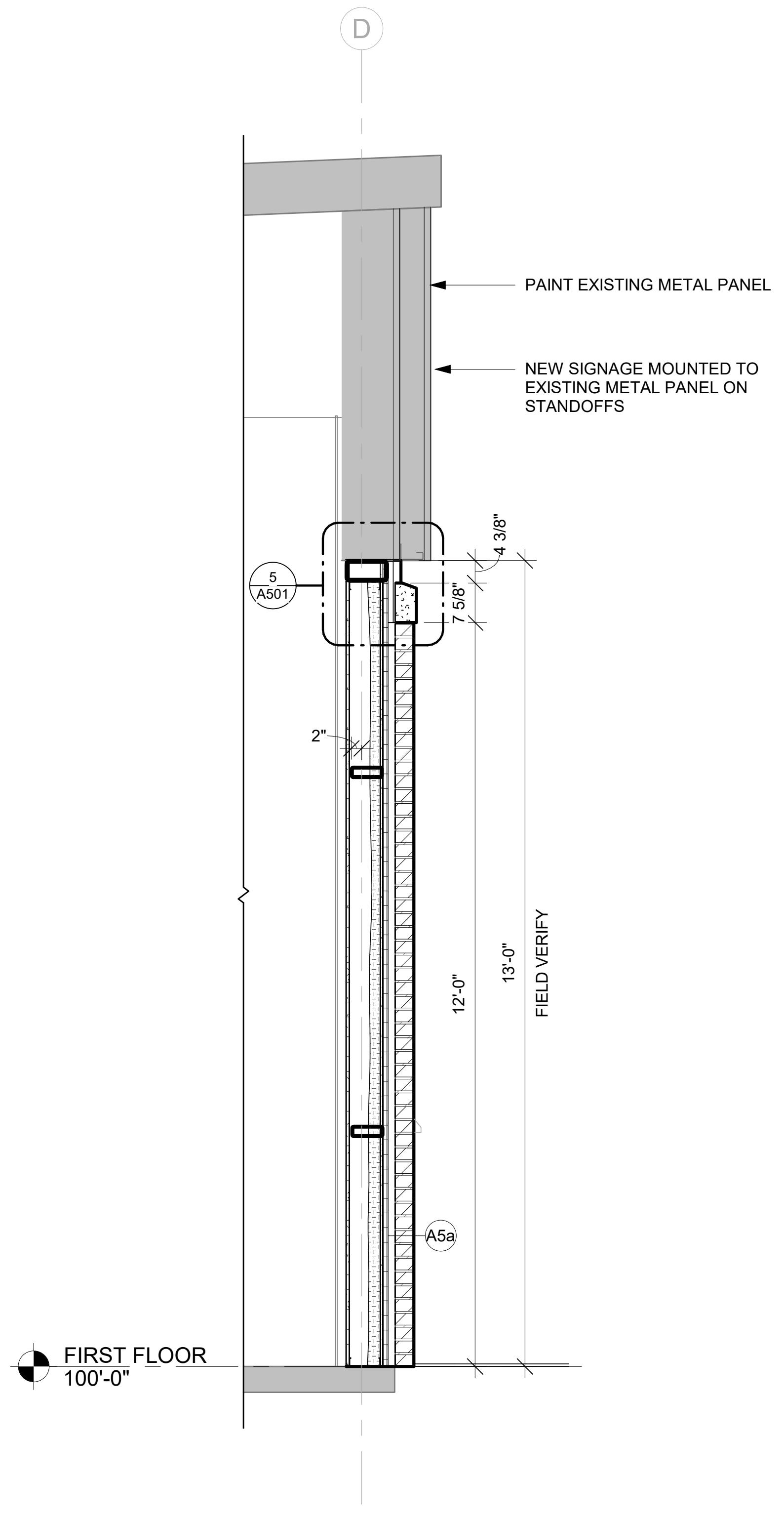
D
PAINT EXISTING METAL PANEL
NEW SIGNAGE MOUNTED TO
EXISTING METAL PANEL ON
STANDOFFS
5
A501
4 3/8"
7 5/8"
2"
12'-0"
13'-0"
FIELD VERIFY
A5a
FIRST FLOOR
100'-0"

6 WALL SECTION
1/2" = 1'-0"

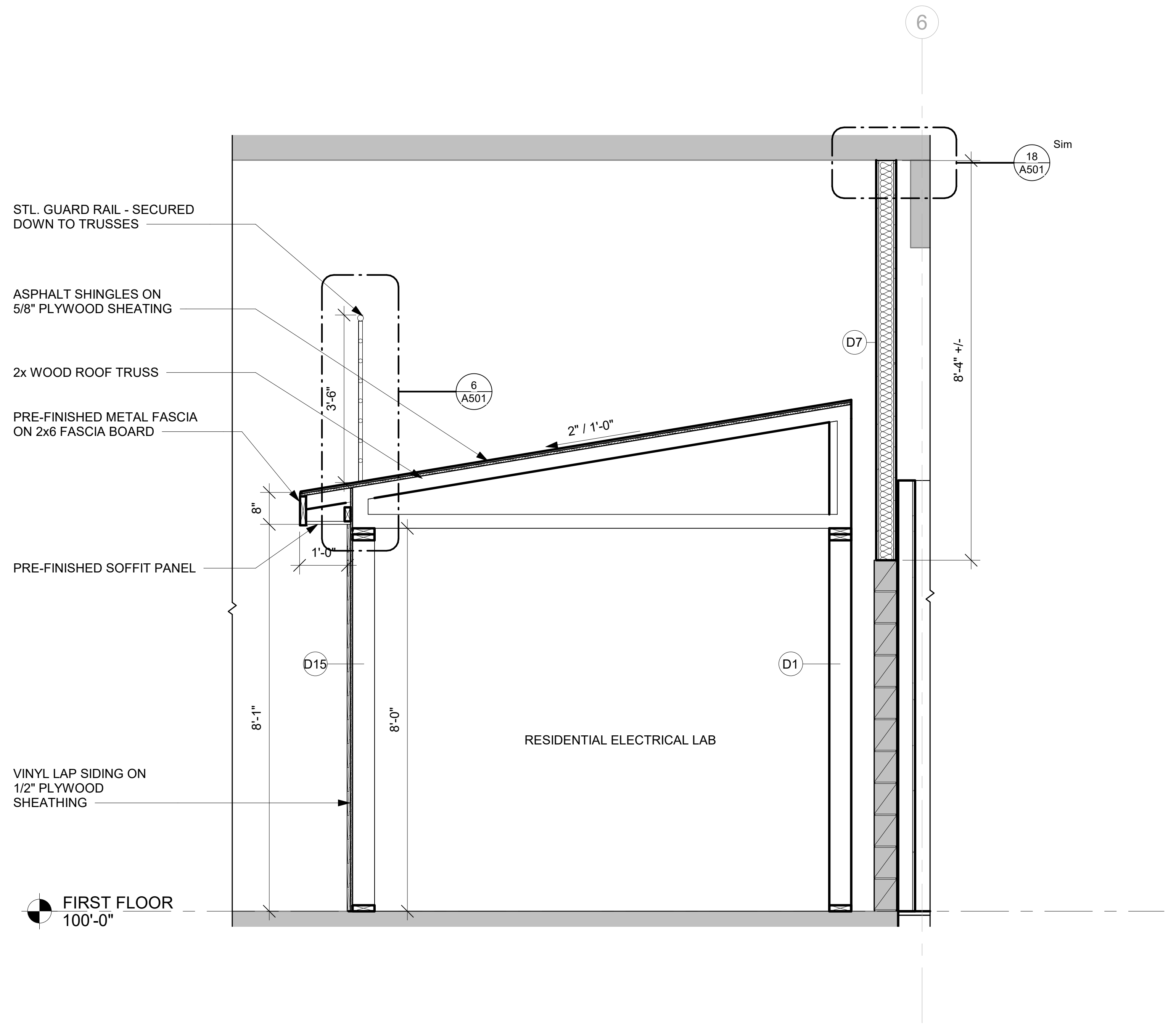
6
18
A501
Sim
STL. GUARD RAIL - SECURED
DOWN TO TRUSSES
ASPHALT SHINGLES ON
5/8" PLYWOOD SHEATING
2x WOOD ROOF TRUSS
PRE-FINISHED METAL FASCIA
ON 2x6 FASCIA BOARD
PRE-FINISHED SOFFIT PANEL
3'-6"
6
A501
2" / 1'-0"
D7
8'-4" +/-
8"
1'-0"
D15
D1
8'-1"
8'-0"
RESIDENTIAL ELECTRICAL LAB
VINYL LAP SIDING ON
1/2" PLYWOOD
SHEATHING
FIRST FLOOR
100'-0"

7 WALL SECTION
1/2" = 1'-0"

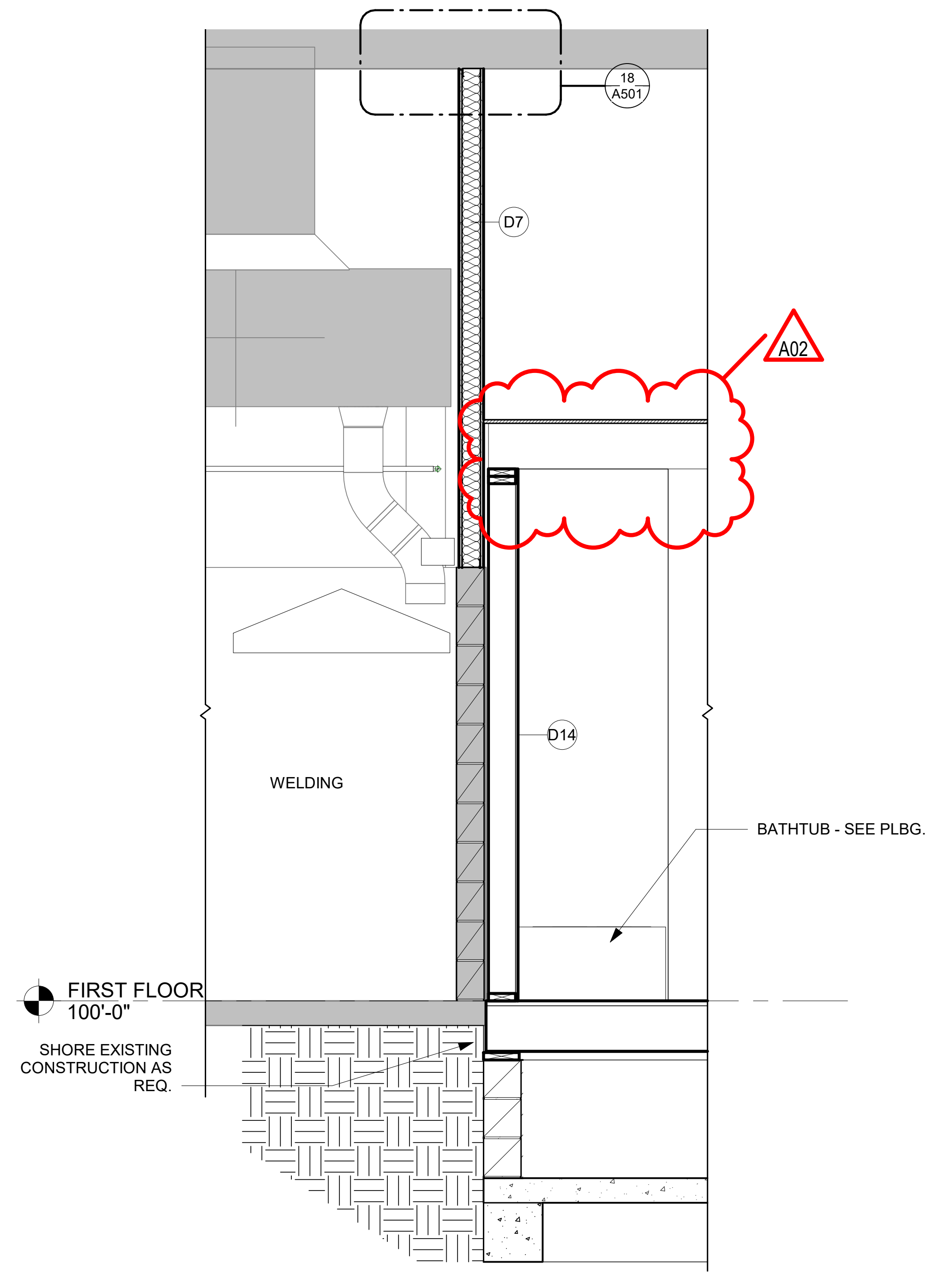
18
A501
D7
A02
D14
WELDING
BATHTUB - SEE PLBG.
FIRST FLOOR
100'-0"
SHORE EXISTING
CONSTRUCTION AS
REQ.

8 WALL SECTION
1/2" = 1'-0"

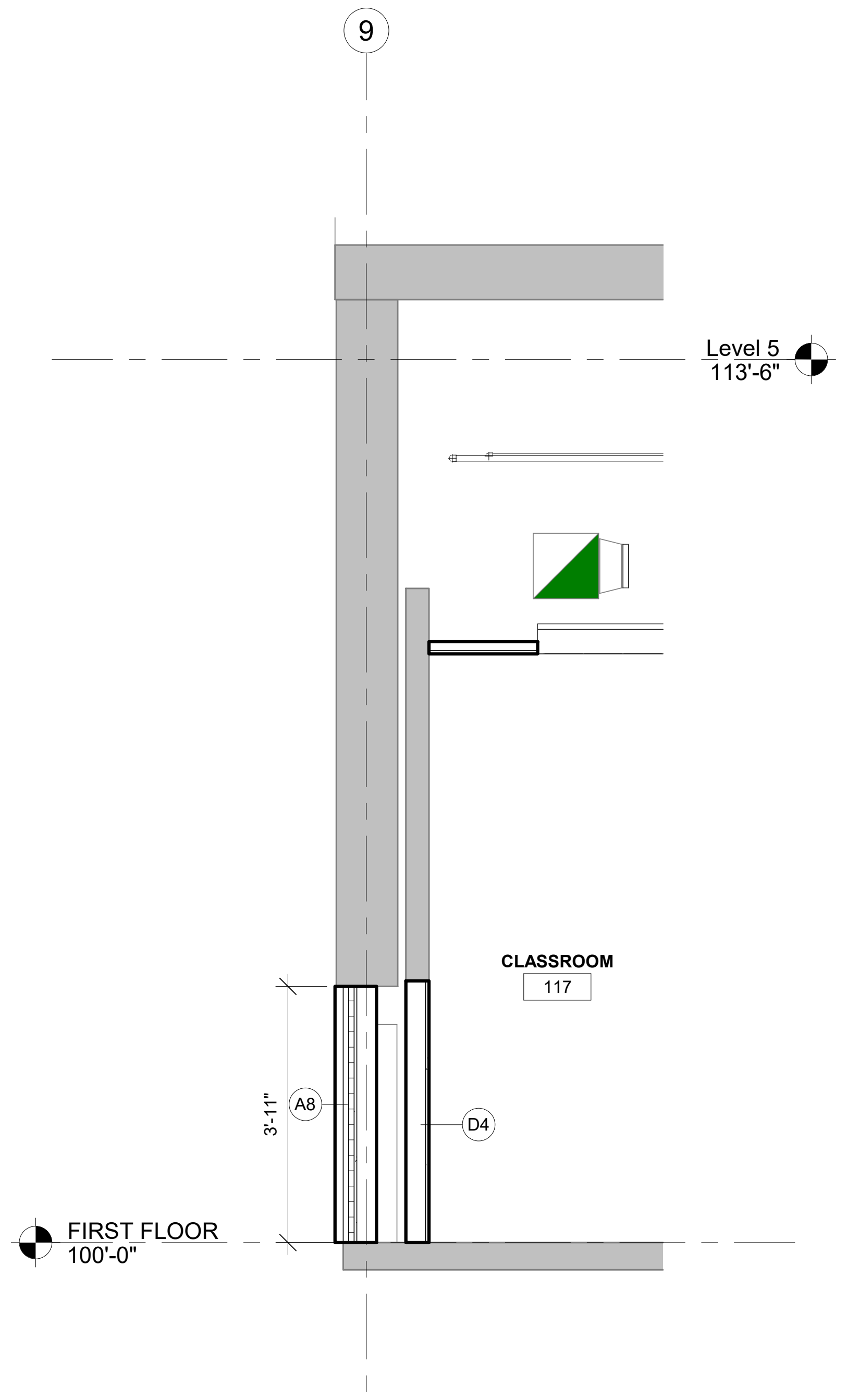
9
Level 5
113'-6"
CLASSROOM
117
3'-11"
A8
D4
FIRST FLOOR
100'-0"

1 WALL SECTION
1/2" = 1'-0"

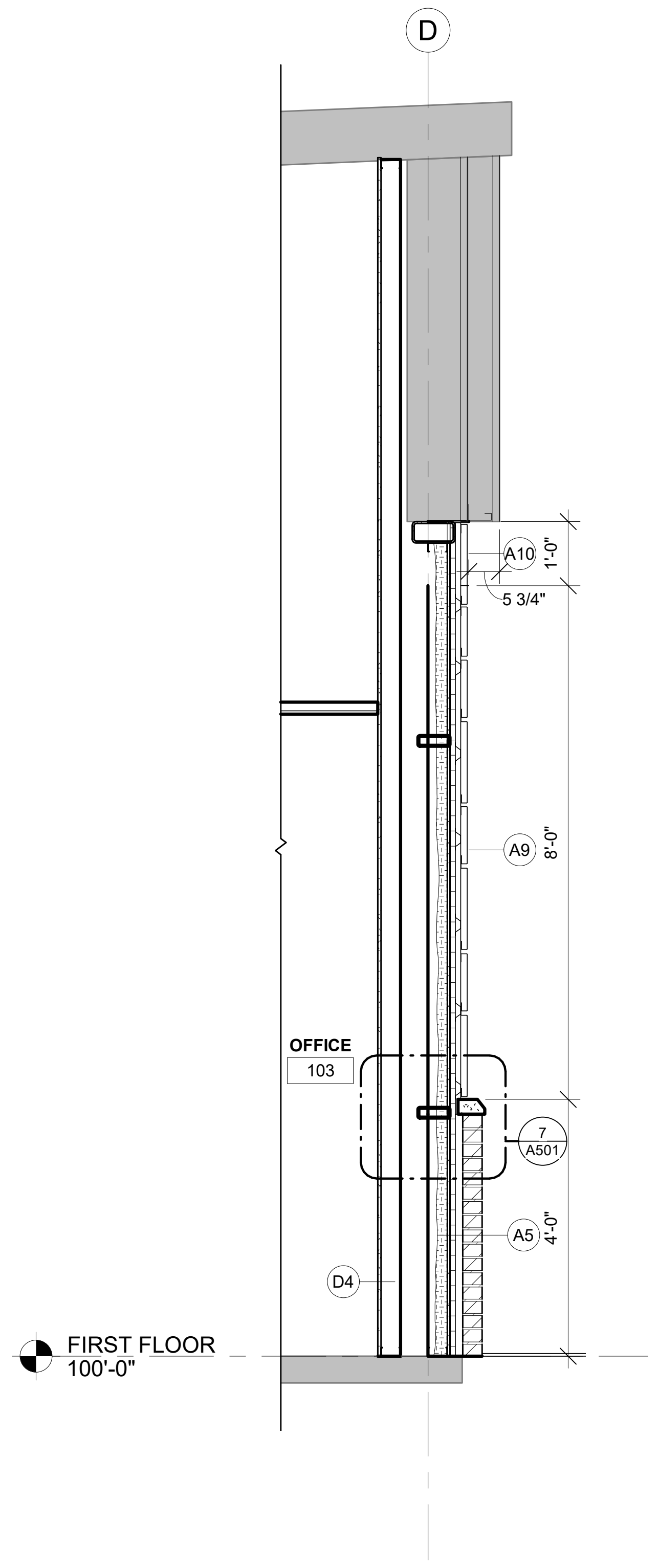
D
A10
1'-0"
5 3/4"
A9
8'-0"
OFFICE
103
7
A501
A5
4'-0"
D4
FIRST FLOOR
100'-0"

2 WALL SECTION
1/2" = 1'-0"

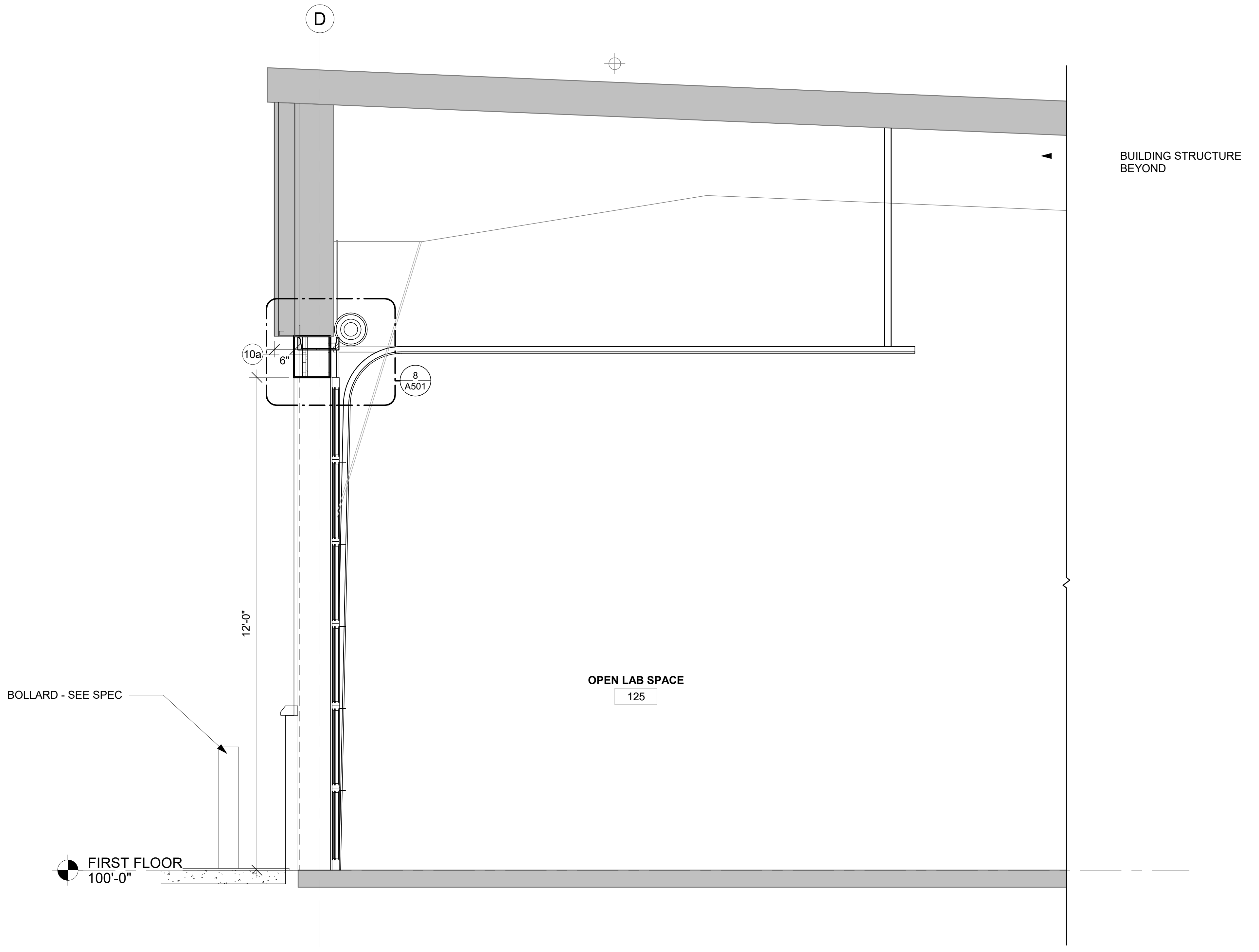
D
BUILDING STRUCTURE
BEYOND
10a
6"
8
A501
12'-0"
BOLLARD - SEE SPEC
OPEN LAB SPACE
125
FIRST FLOOR
100'-0"

3 WALL SECTION
1/2" = 1'-0"

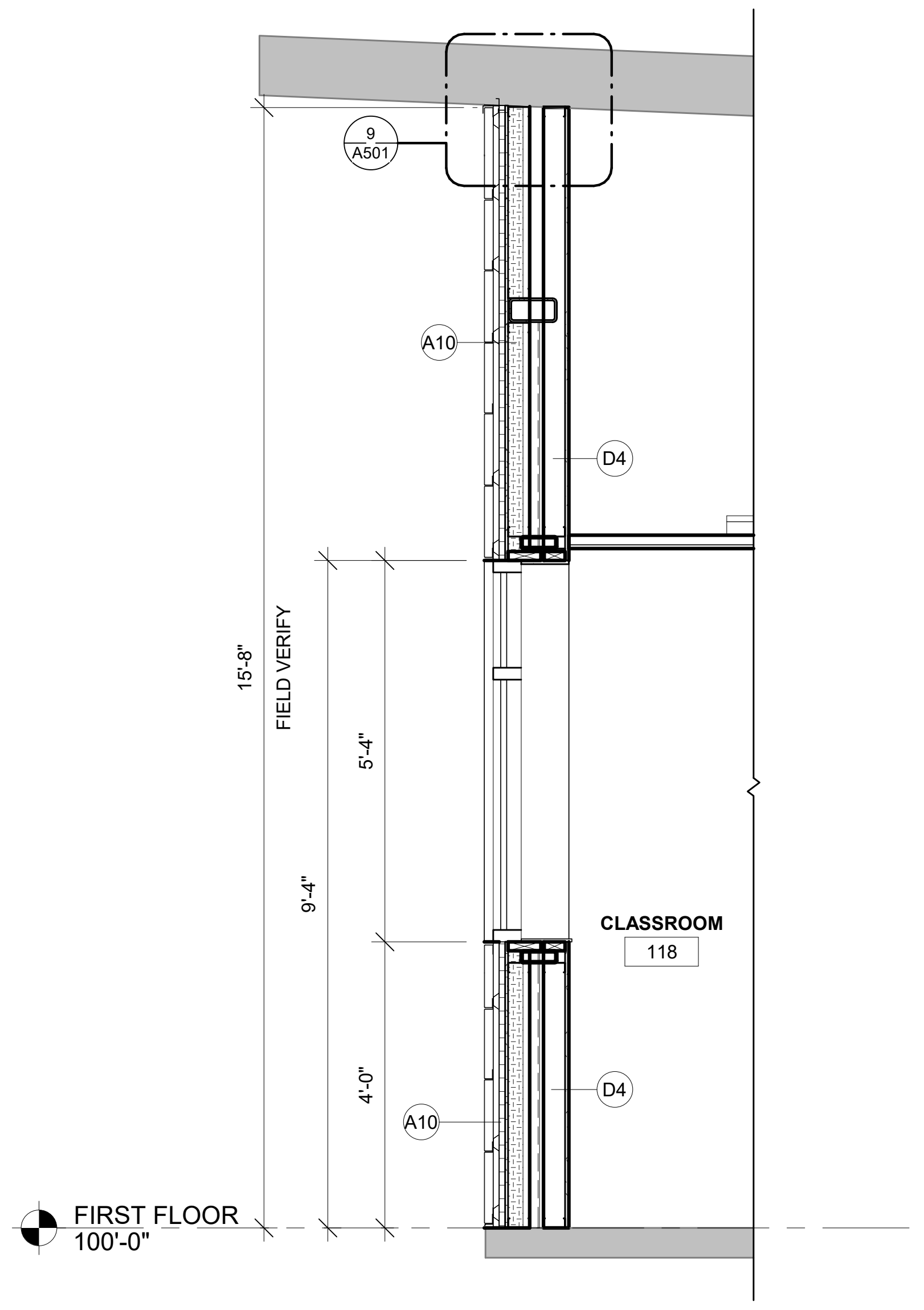
9
A501
A10
D4
15'-8"
FIELD VERIFY
5'-4"
9'-4"
4'-0"
CLASSROOM
118
A10
D4
FIRST FLOOR
100'-0"

4 WALL SECTION
1/2" = 1'-0"

ARCHITECTURE
ENGINEERING
INTERIOR DESIGN

HSR ASSOCIATES INC.
100 MILWAUKEE STREET
LA CROSSE, WISCONSIN
PHONE: 608.784.1830
FAX: 608.782.5844
www.hsrassociates.com

Consultant:

Project Title:
WESTERN TECHNICAL COLLEGE
APPRENTICESHIP CENTER REMODEL

Project Location:
2860 21ST PL S
LA CROSSE, WI 54601

Sheet Title:
WALL SECTIONS

HSR Project Number:
19021

Project Date:
FEBRUARY 2020

Drawn By:
M.MALAND

Key Plan:

Revisions:

No.	Description	Date
A02	ADDENDUM #2	02/25/2020

Graphic Scale:
VARIES

Last Update:
2/24/2020 10:36:09 AM

A311

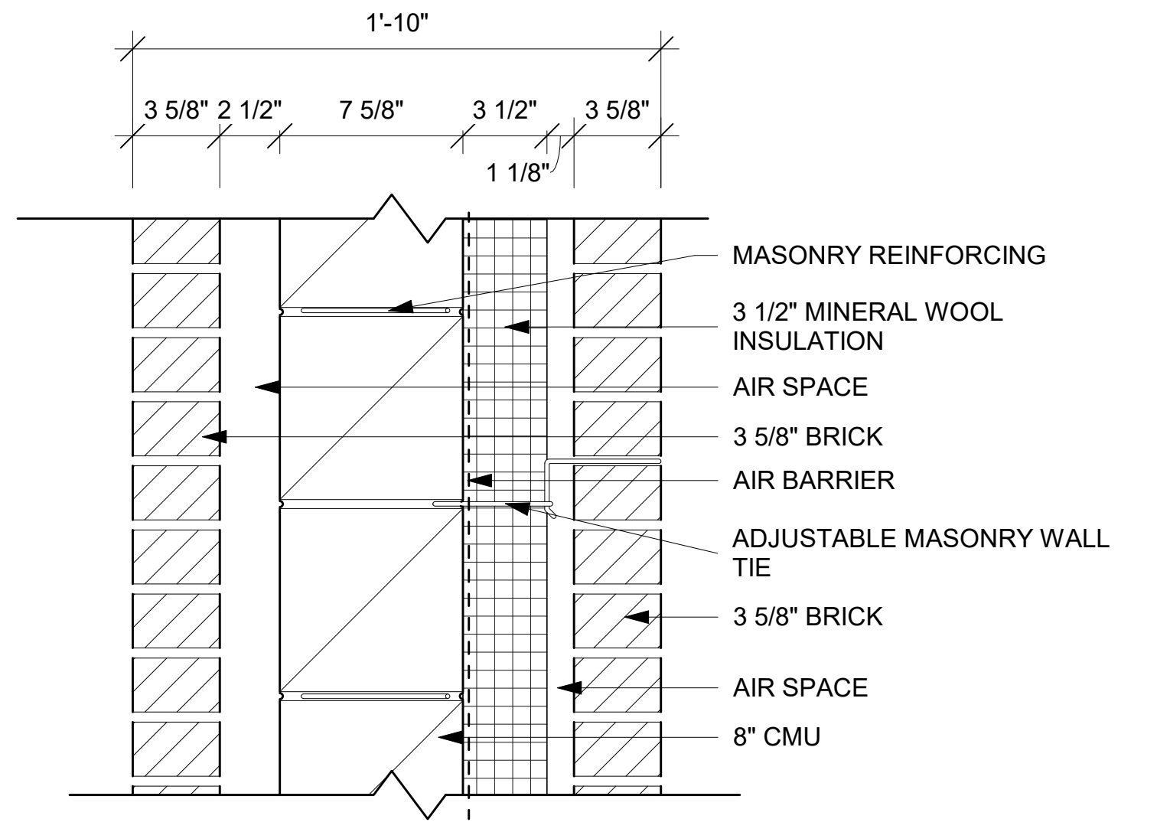
1'-10"
3 5/8"
2 1/2"
7 5/8"
3 1/2"
3 5/8"
1 1/8"
MASONRY REINFORCING
3 1/2" MINERAL WOOL INSULATION
AIR SPACE
3 5/8" BRICK
AIR BARRIER
ADJUSTABLE MASONRY WALL TIE
3 5/8" BRICK
AIR SPACE
8" CMU

PARTITION TYPE	STUD WIDTH / SPACING	PARTITION WIDTH		FIRE RESISTANCE RATING	R-VALUE	NOTES
		ACTUAL	NOMINAL			
A1		1'-10"	1'-10"		19.59	

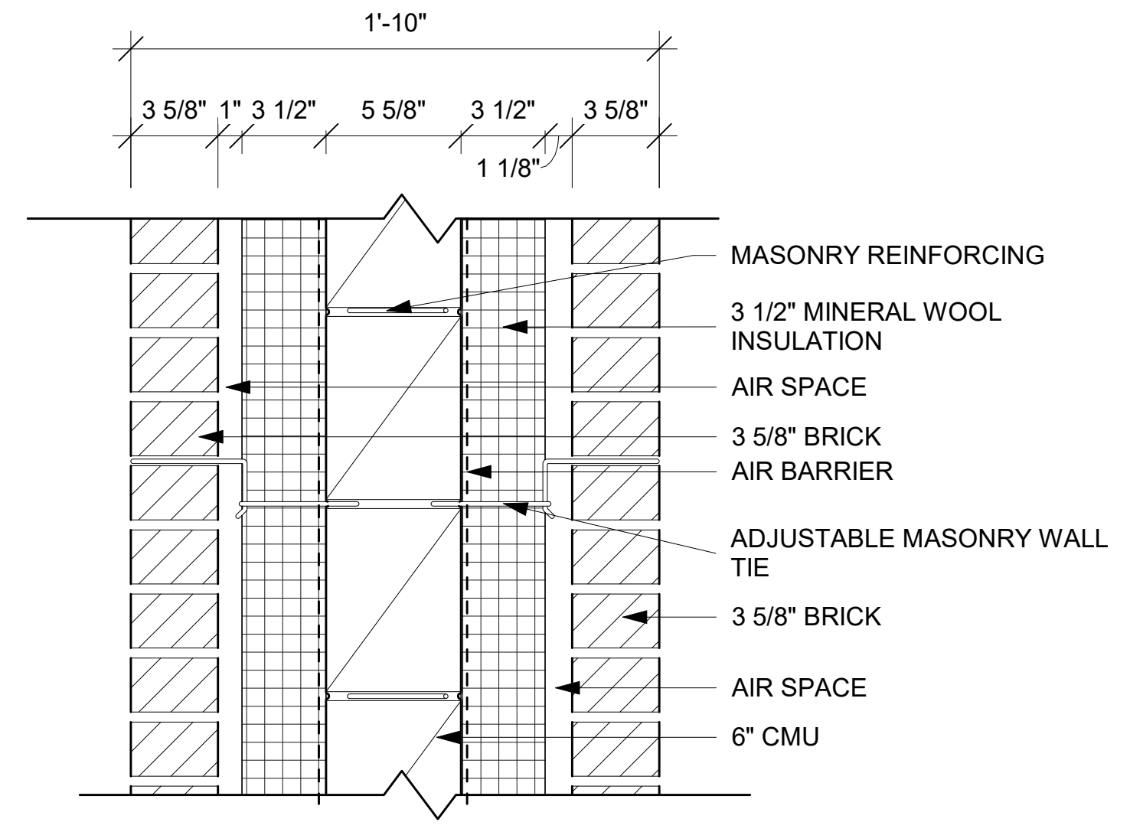
1'-10"
3 5/8"
1"
3 1/2"
5 5/8"
3 1/2"
3 5/8"
1 1/8"
MASONRY REINFORCING
3 1/2" MINERAL WOOL INSULATION
AIR SPACE
3 5/8" BRICK
AIR BARRIER
ADJUSTABLE MASONRY WALL TIE
3 5/8" BRICK
AIR SPACE
6" CMU

PARTITION TYPE	STUD WIDTH / SPACING	PARTITION WIDTH		FIRE RESISTANCE RATING	R-VALUE	NOTES
		ACTUAL	NOMINAL			
A2		1'-10"	1'-10"		34.13	

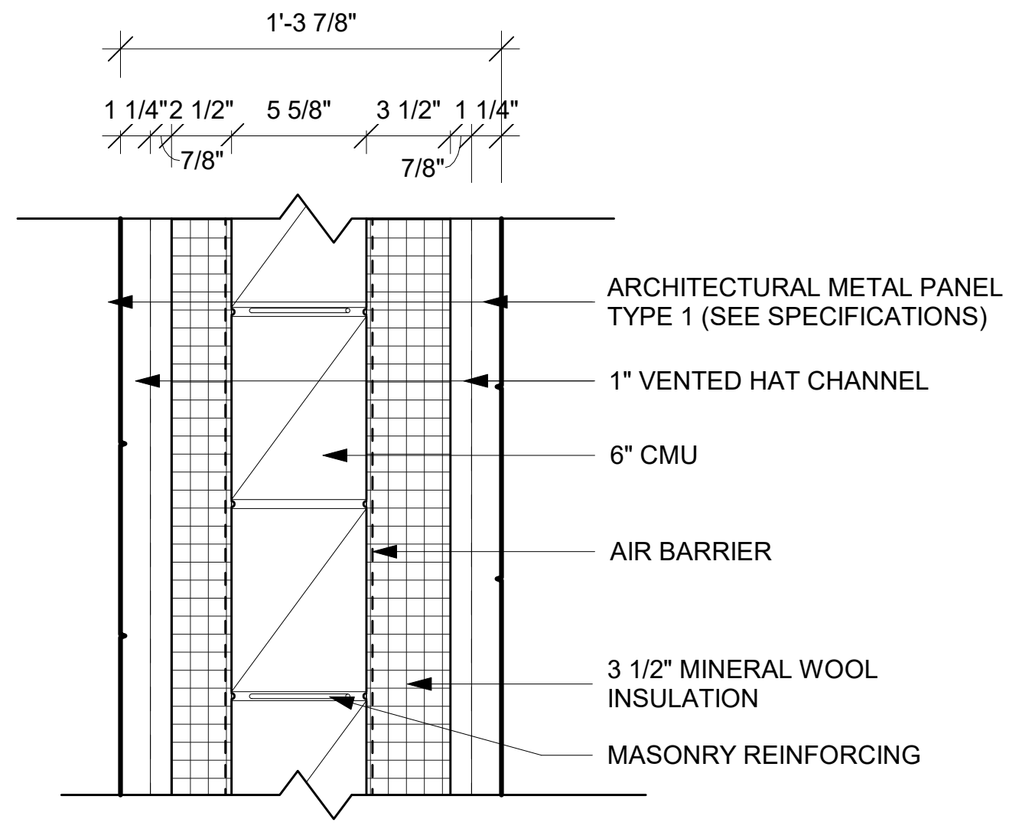
1'-3 7/8"
1 1/4"
2 1/2"
5 5/8"
3 1/2"
1 1/4"
7/8"
7/8"
ARCHITECTURAL METAL PANEL TYPE 1 (SEE SPECIFICATIONS)
1" VENTED HAT CHANNEL
6" CMU
AIR BARRIER
3 1/2" MINERAL WOOL INSULATION
MASONRY REINFORCING

PARTITION TYPE	STUD WIDTH / SPACING	PARTITION WIDTH		FIRE RESISTANCE RATING	R-VALUE	NOTES
		ACTUAL	NOMINAL			
A3		1'-3 7/8"	1'-4"		29.34	

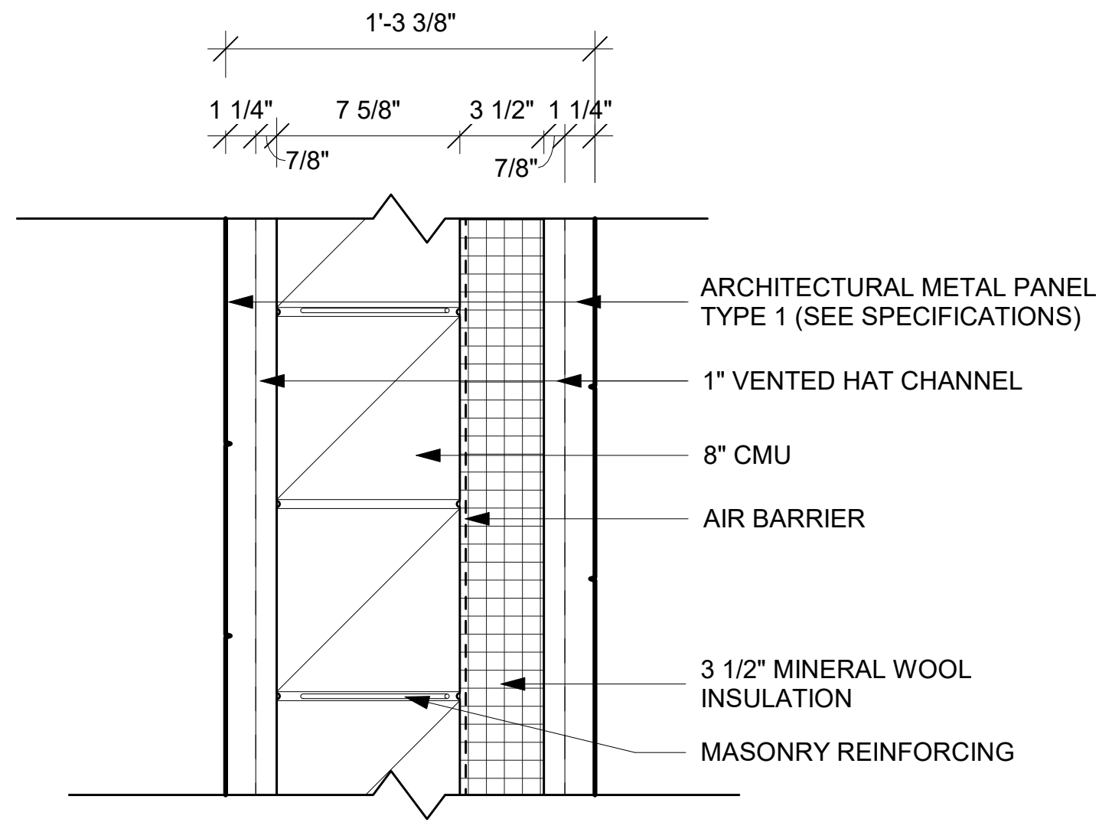
1'-3 3/8"
1 1/4"
7 5/8"
3 1/2"
1 1/4"
7/8"
7/8"
ARCHITECTURAL METAL PANEL TYPE 1 (SEE SPECIFICATIONS)
1" VENTED HAT CHANNEL
8" CMU
AIR BARRIER
3 1/2" MINERAL WOOL INSULATION
MASONRY REINFORCING

PARTITION TYPE	STUD WIDTH / SPACING	PARTITION WIDTH		FIRE RESISTANCE RATING	R-VALUE	NOTES
		ACTUAL	NOMINAL			
A4		1'-3 3/8"	1'-3"		19.95	

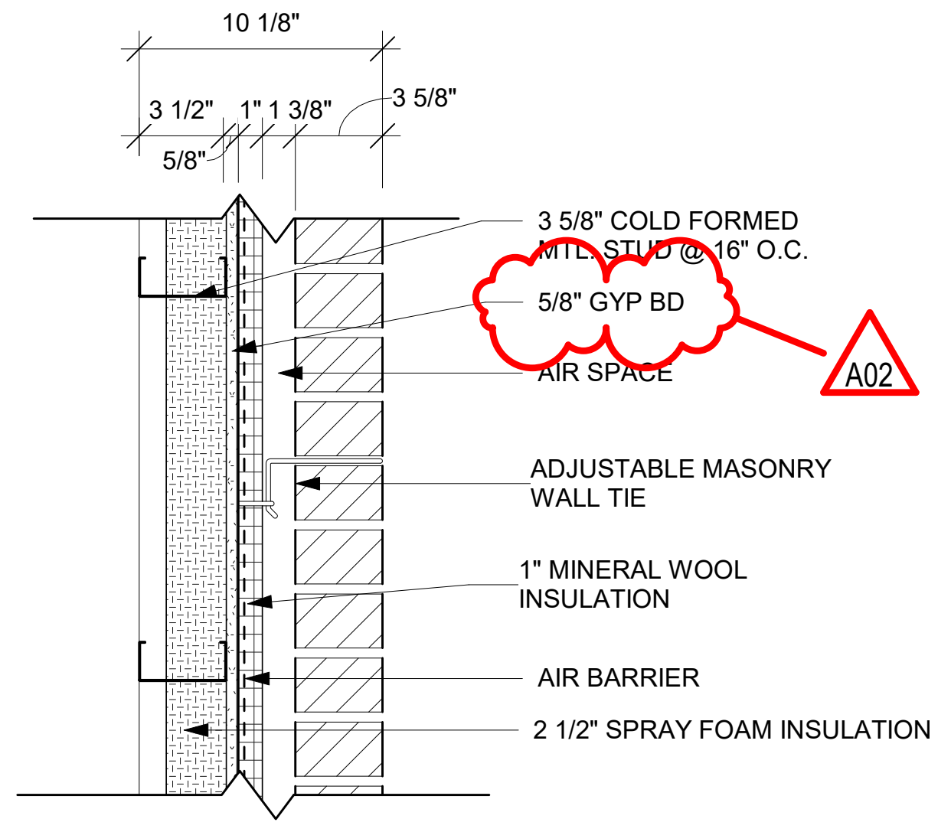
10 1/8"
3 1/2"
1"
1 3/8"
3 5/8"
5/8"
3 5/8" COLD FORMED MTL. STUD @ 16" O.C.
5/8" GYP BD
A02
AIR SPACE
ADJUSTABLE MASONRY WALL TIE
1" MINERAL WOOL INSULATION
AIR BARRIER
2 1/2" SPRAY FOAM INSULATION

PARTITION TYPE	STUD WIDTH / SPACING	PARTITION WIDTH		FIRE RESISTANCE RATING	R-VALUE	NOTES
		ACTUAL	NOMINAL			
A5	16" O.C.	10 1/8"	10"		24.63	

A5a 6" COLD FORMED MTL. STUD AND 5/8" GYP. BD ON INSIDE FACE

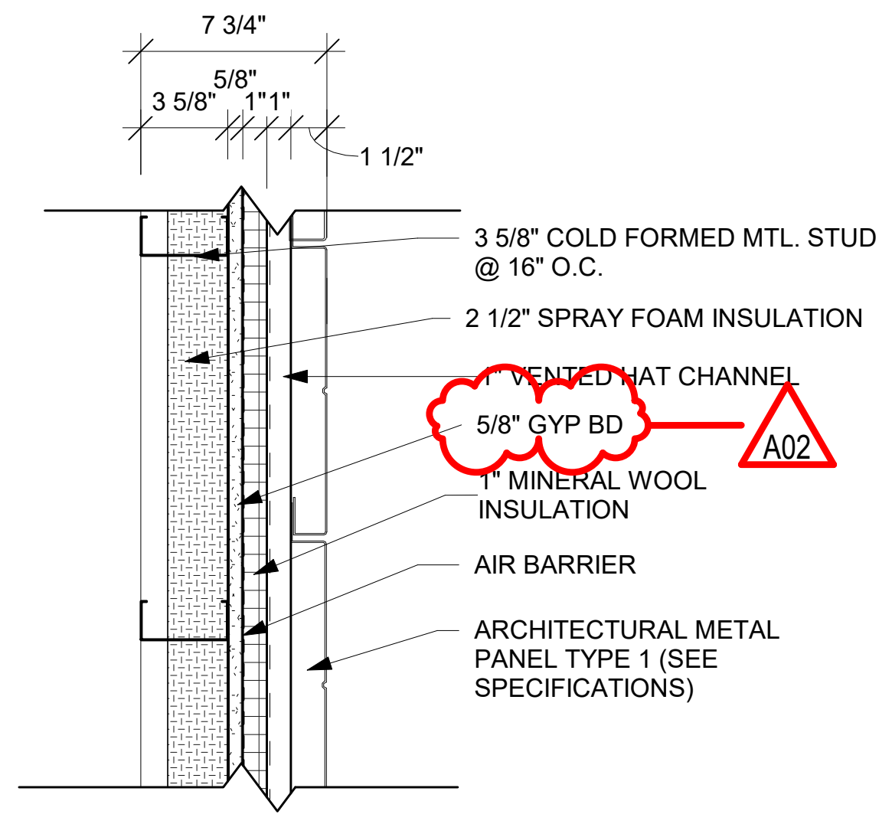
7 3/4"
5/8"
3 5/8"
1"
1"
1 1/2"
3 5/8" COLD FORMED MTL. STUD @ 16" O.C.
2 1/2" SPRAY FOAM INSULATION
1" VENTED HAT CHANNEL
5/8" GYP BD
A02
1" MINERAL WOOL INSULATION
AIR BARRIER
ARCHITECTURAL METAL PANEL TYPE 1 (SEE SPECIFICATIONS)

PARTITION TYPE	STUD WIDTH / SPACING	PARTITION WIDTH		FIRE RESISTANCE RATING	R-VALUE	NOTES
		ACTUAL	NOMINAL			
A8	16" O.C.	7 3/4"	7"		24.81	

A8a 6" COLD FORMED MTL. STUD AND 5/8" GYP. BD ON INSIDE FACE

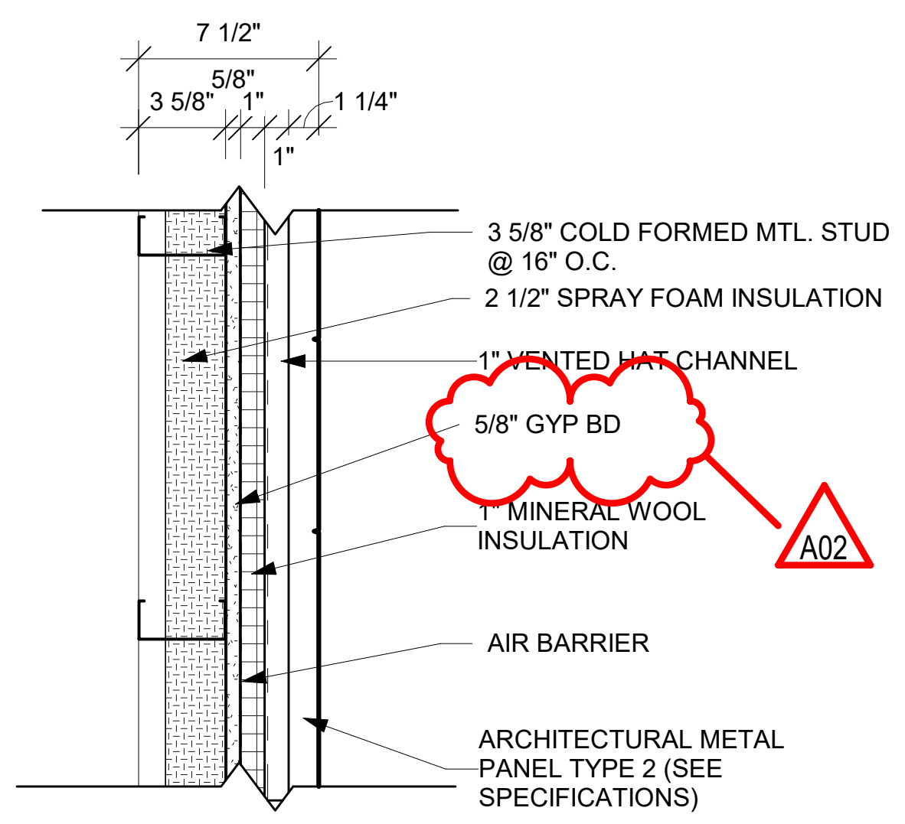
7 1/2"
5/8"
3 5/8"
1"
1 1/4"
1"
3 5/8" COLD FORMED MTL. STUD @ 16" O.C.
2 1/2" SPRAY FOAM INSULATION
1" VENTED HAT CHANNEL
5/8" GYP BD
1" MINERAL WOOL INSULATION
A02
AIR BARRIER
ARCHITECTURAL METAL PANEL TYPE 2 (SEE SPECIFICATIONS)

PARTITION TYPE	STUD WIDTH / SPACING	PARTITION WIDTH		FIRE RESISTANCE RATING	R-VALUE	NOTES
		ACTUAL	NOMINAL			
A9	16" O.C.	7 1/2"	7"		24.81	

A9a 6" COLD FORMED MTL. STUD AND 5/8" GYP. BD ON INSIDE FACE

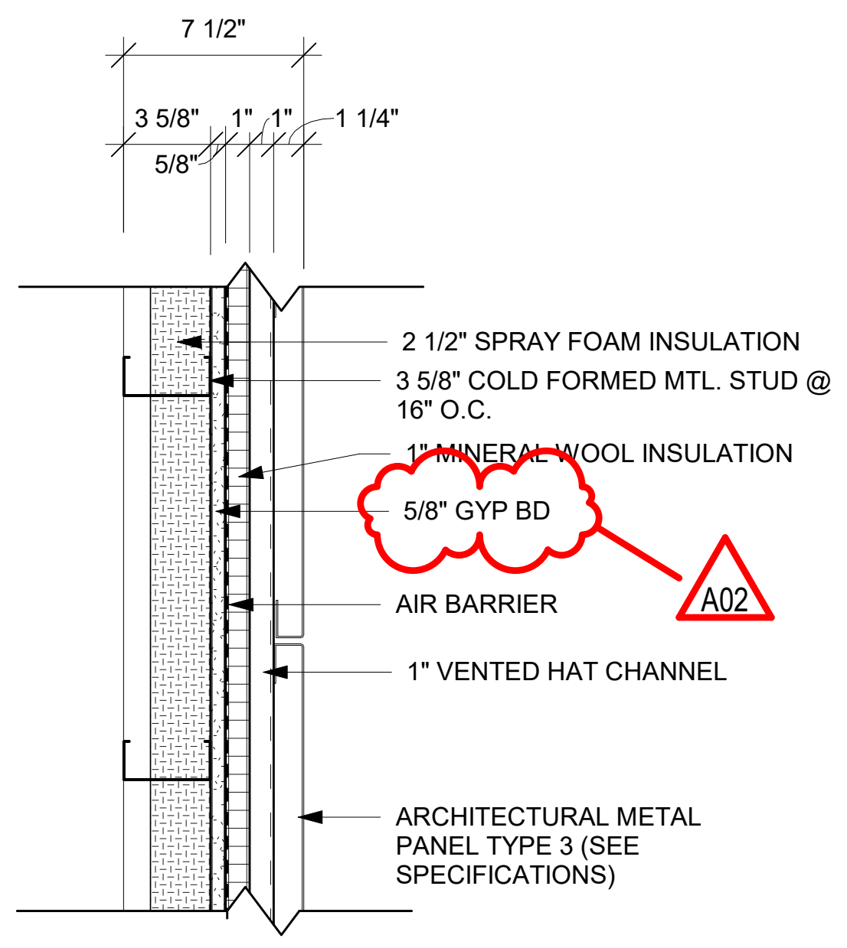
7 1/2"
3 5/8"
1"
1"
1 1/4"
5/8"
2 1/2" SPRAY FOAM INSULATION
3 5/8" COLD FORMED MTL. STUD @ 16" O.C.
1" MINERAL WOOL INSULATION
5/8" GYP BD
AIR BARRIER
A02
1" VENTED HAT CHANNEL
ARCHITECTURAL METAL PANEL TYPE 3 (SEE SPECIFICATIONS)

PARTITION TYPE	STUD WIDTH / SPACING	PARTITION WIDTH		FIRE RESISTANCE RATING	R-VALUE	NOTES
		ACTUAL	NOMINAL			
A10	16" O.C.	7 1/2"	7"		24.81	

A10a 6" COLD FORMED MTL. STUD AND 5/8" GYP. BD ON INSIDE FACE

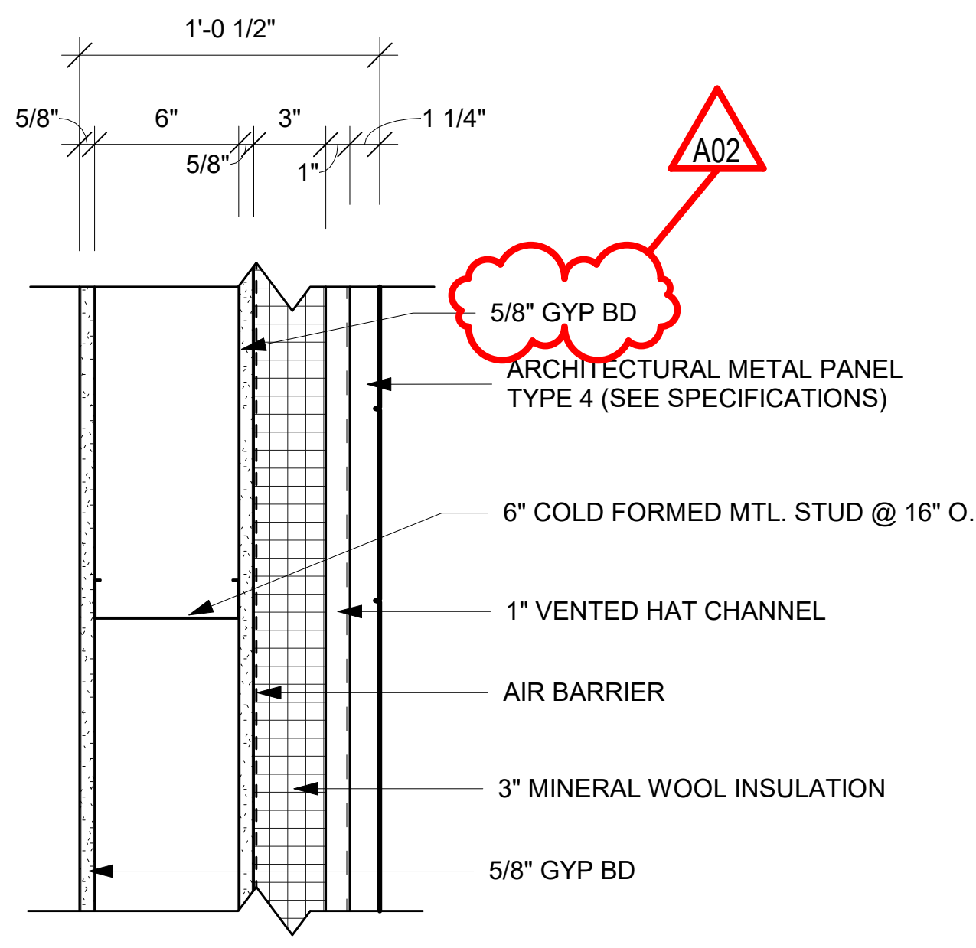
1'-0 1/2"
5/8"
6"
3"
1 1/4"
5/8"
1"
A02
5/8" GYP BD
ARCHITECTURAL METAL PANEL TYPE 4 (SEE SPECIFICATIONS)
6" COLD FORMED MTL. STUD @ 16" O.C.
1" VENTED HAT CHANNEL
AIR BARRIER
3" MINERAL WOOL INSULATION
5/8" GYP BD

PARTITION TYPE	STUD WIDTH / SPACING	PARTITION WIDTH		FIRE RESISTANCE RATING	R-VALUE	NOTES
		ACTUAL	NOMINAL			
A11	16" O.C.	1'-0 1/2"	1'-0"		16.73	

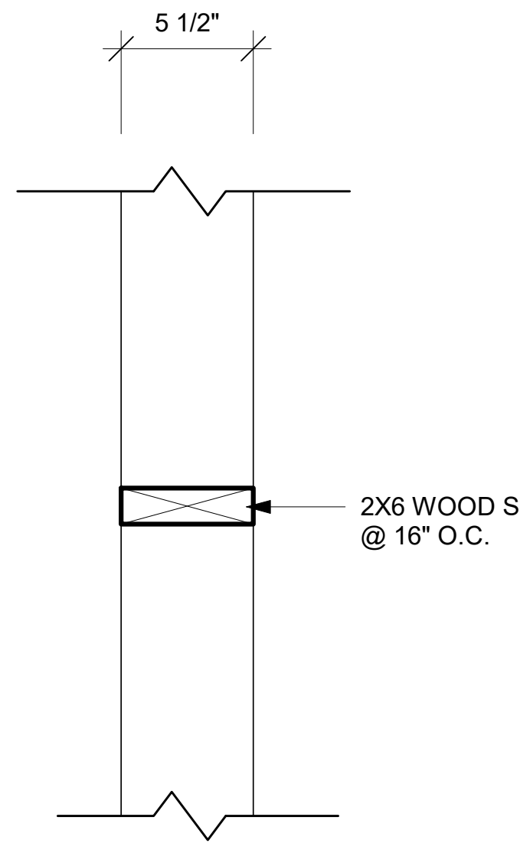
5 1/2"
2X6 WOOD STUD @ 16" O.C.

PARTITION TYPE	STUD WIDTH / SPACING	PARTITION WIDTH		FIRE RESISTANCE RATING	R-VALUE	NOTES
		ACTUAL	NOMINAL			
D1	16" O.C.	5 1/2"	5"			

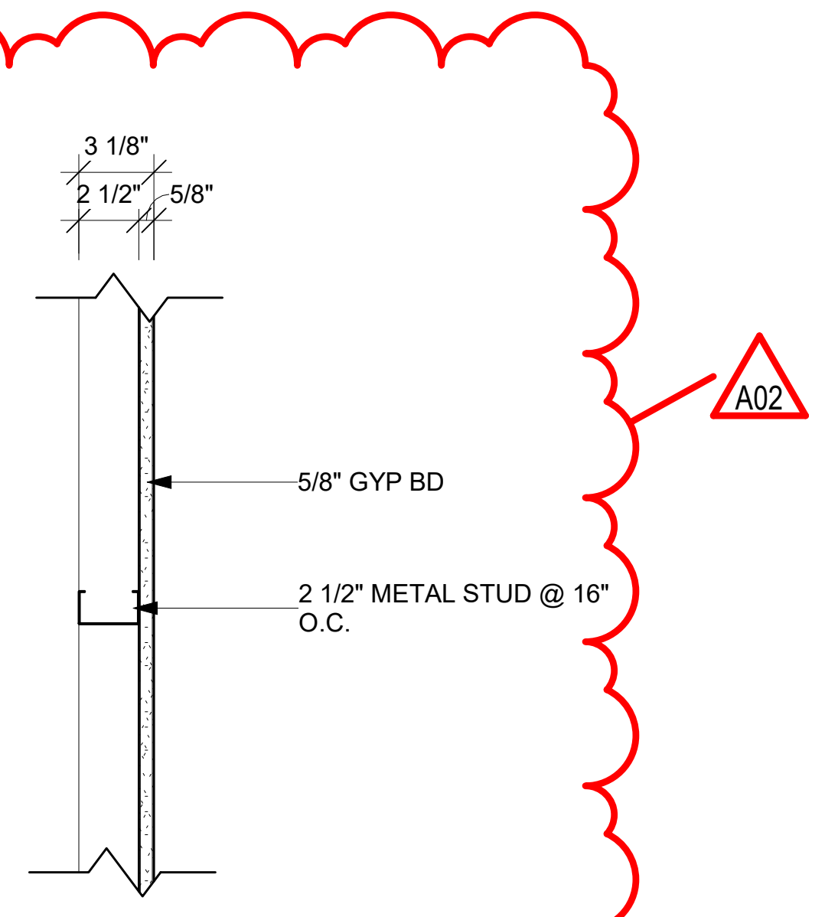
3 1/8"
2 1/2"
5/8"
5/8" GYP BD
2 1/2" METAL STUD @ 16" O.C.
A02

PARTITION TYPE	STUD WIDTH / SPACING	PARTITION WIDTH		FIRE RESISTANCE RATING	UL #	STC RATING
		ACTUAL	NOMINAL			
D2	16" O.C.	3 1/8"	3"			

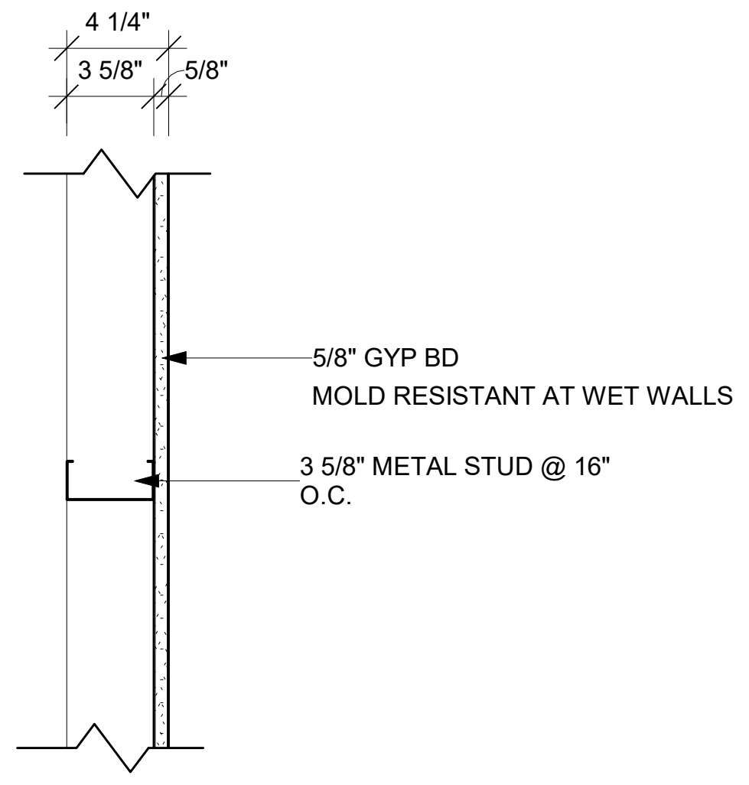
4 1/4"
3 5/8"
5/8"
5/8" GYP BD
MOLD RESISTANT AT WET WALLS
3 5/8" METAL STUD @ 16" O.C.

PARTITION TYPE	STUD WIDTH / SPACING	PARTITION WIDTH		FIRE RESISTANCE RATING	UL #	STC RATING
		ACTUAL	NOMINAL			
D4	16" O.C.	4 1/4"	4"			

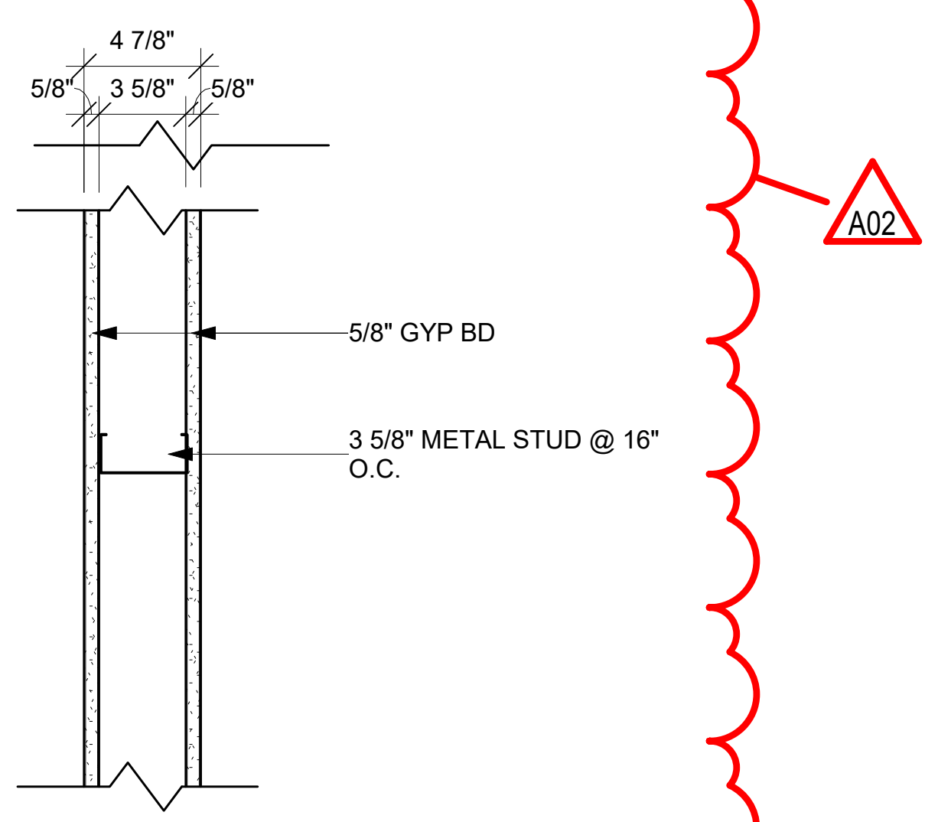
4 7/8"
5/8"
3 5/8"
5/8"
5/8" GYP BD
3 5/8" METAL STUD @ 16" O.C.
A02

PARTITION TYPE	STUD WIDTH / SPACING	PARTITION WIDTH		FIRE RESISTANCE RATING	UL #	STC RATING
		ACTUAL	NOMINAL			
D6	16" O.C.	4 1/4"	4"			

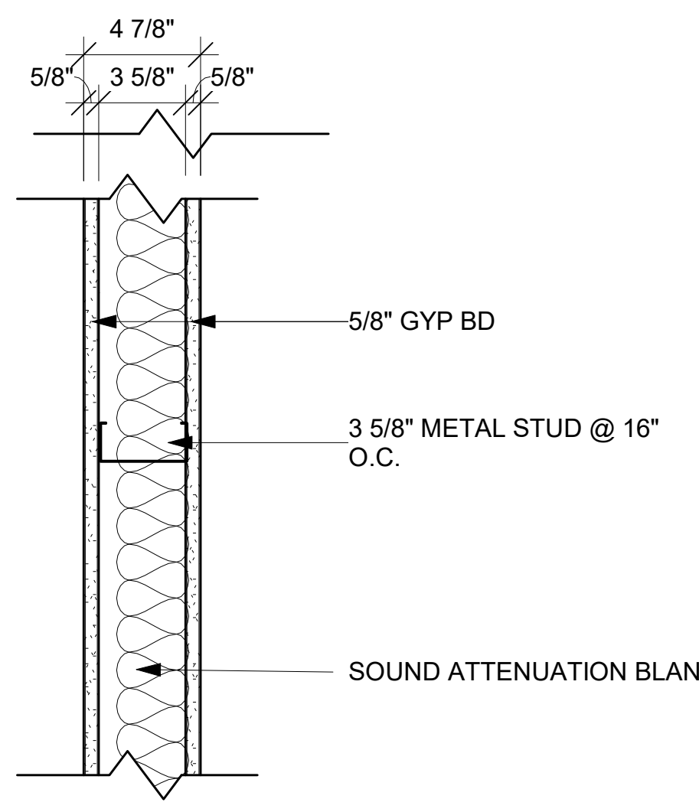
4 7/8"
5/8"
3 5/8"
5/8"
5/8" GYP BD
3 5/8" METAL STUD @ 16" O.C.
SOUND ATTENUATION BLANKET

PARTITION TYPE	STUD WIDTH / SPACING	PARTITION WIDTH		FIRE RESISTANCE RATING	UL #	STC RATING
		ACTUAL	NOMINAL			
D7	16" O.C.	4 7/8"	5"			47

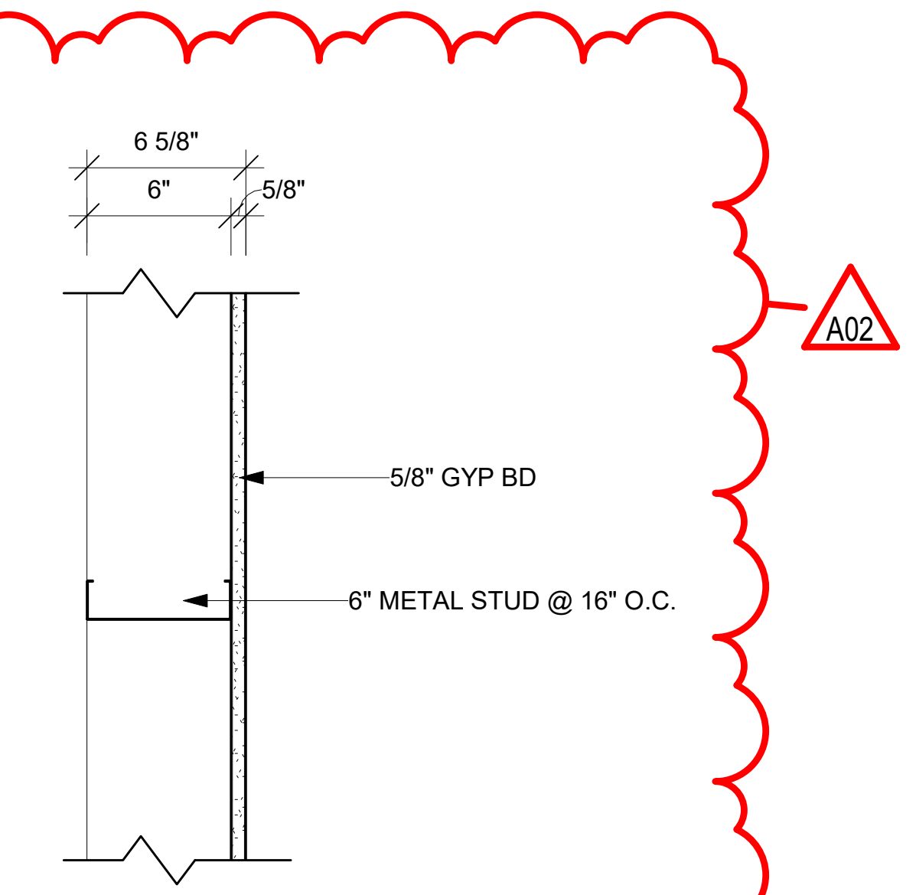
6 5/8"
6"
5/8"
A02
5/8" GYP BD
6" METAL STUD @ 16" O.C.

PARTITION TYPE	STUD WIDTH / SPACING	PARTITION WIDTH		FIRE RESISTANCE RATING	UL #	STC RATING
		ACTUAL	NOMINAL			
D8	16" O.C.	6 5/8"	6"			

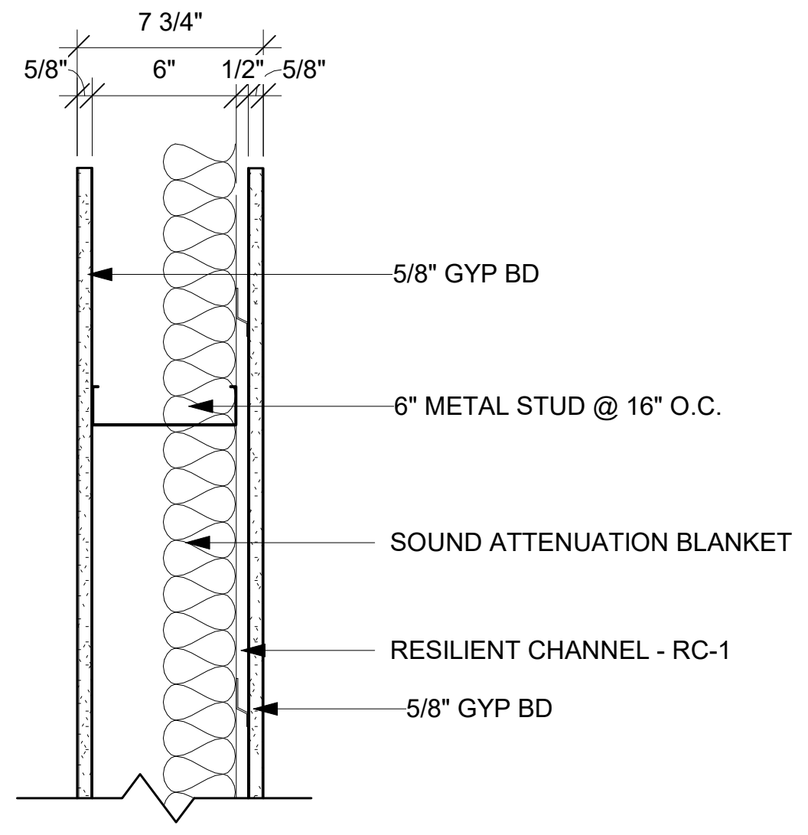
7 3/4"
5/8"
6"
1/2"
5/8"
5/8" GYP BD
6" METAL STUD @ 16" O.C.
SOUND ATTENUATION BLANKET
RESILIENT CHANNEL - RC-1
5/8" GYP BD

PARTITION TYPE	STUD WIDTH / SPACING	PARTITION WIDTH		FIRE RESISTANCE RATING	UL #	STC RATING
		ACTUAL	NOMINAL			
D11	16" O.C.	7 3/4"	8"			47

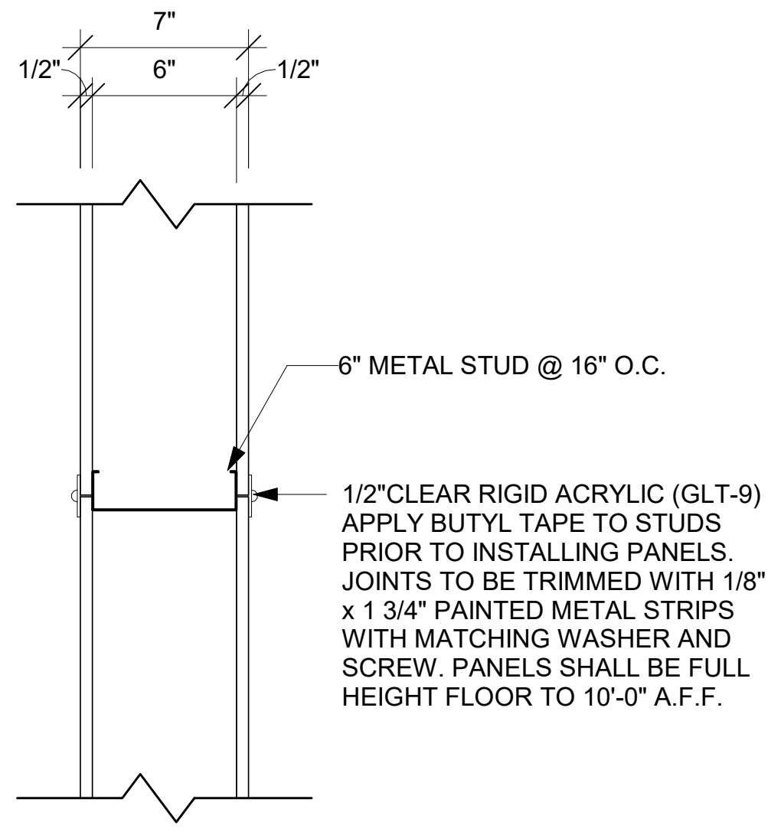
7"
1/2"
6"
1/2"
6" METAL STUD @ 16" O.C.

1/2"CLEAR RIGID ACRYLIC (GLT-9) APPLY BUTYL TAPE TO STUDS PRIOR TO INSTALLING PANELS. JOINTS TO BE TRIMMED WITH 1/8" x 1 3/4" PAINTED METAL STRIPS WITH MATCHING WASHER AND SCREW. PANELS SHALL BE FULL HEIGHT FLOOR TO 10'-0" A.F.F.

PARTITION TYPE	STUD WIDTH / SPACING	PARTITION WIDTH		FIRE RESISTANCE RATING	UL #	STC RATING
		ACTUAL	NOMINAL			
D12	16" O.C.	7"	7"			

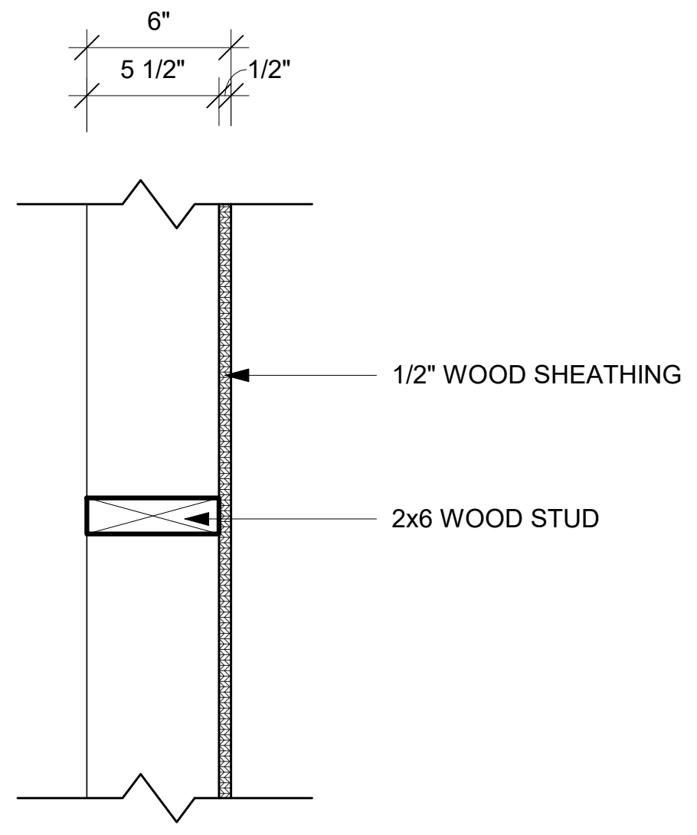
6"
5 1/2"
1/2"
1/2" WOOD SHEATHING
2x6 WOOD STUD

PARTITION TYPE	STUD WIDTH / SPACING	PARTITION WIDTH		FIRE RESISTANCE RATING	UL #	STC RATING
		ACTUAL	NOMINAL			
D14	16" O.C.	6"	6"			

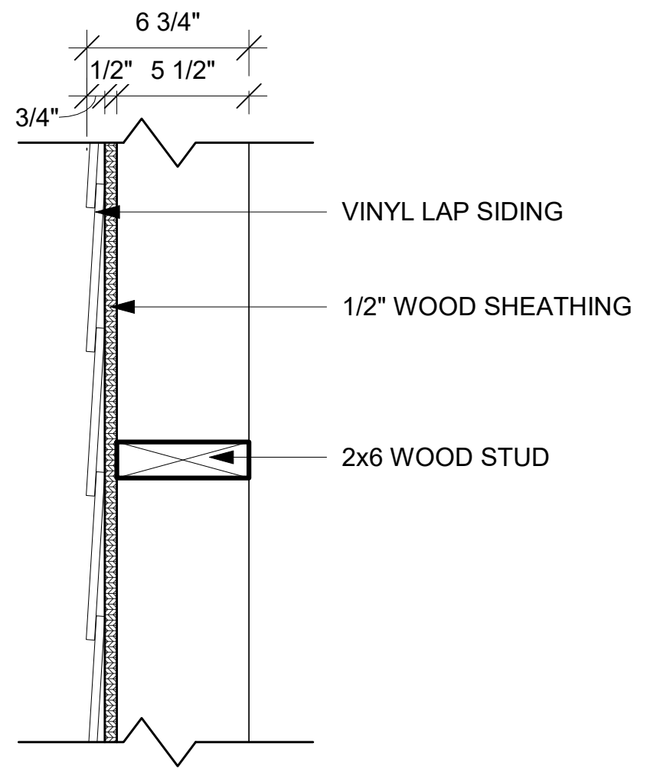
6 3/4"
1/2"
5 1/2"
3/4"
VINYL LAP SIDING
1/2" WOOD SHEATHING
2x6 WOOD STUD

PARTITION TYPE	STUD WIDTH / SPACING	PARTITION WIDTH		FIRE RESISTANCE RATING	UL #	STC RATING
		ACTUAL	NOMINAL			
D15	16" O.C.	6 3/4"	7"			

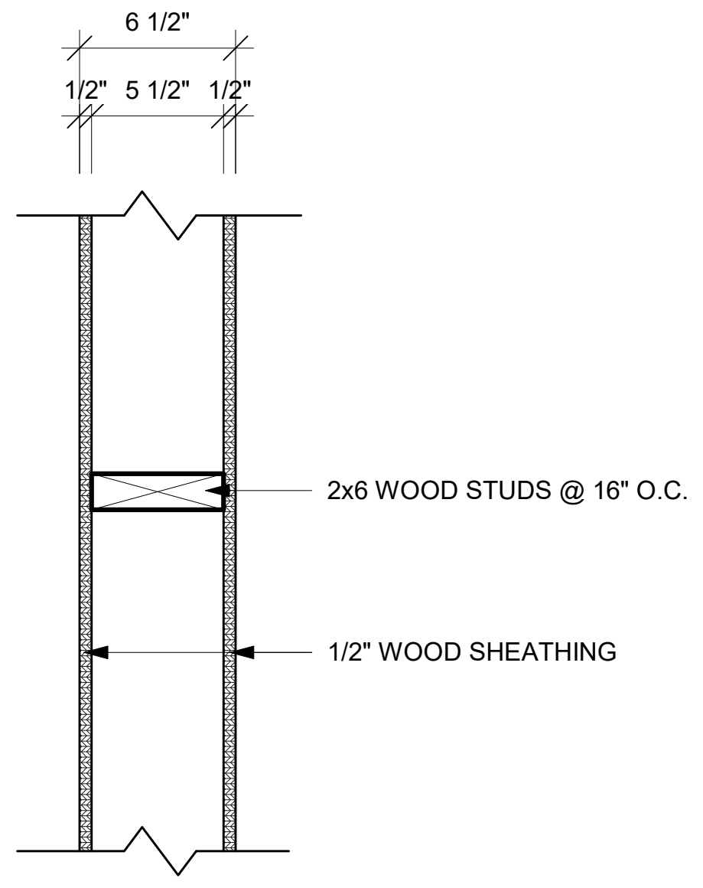
6 1/2"
1/2"
5 1/2"
1/2"
2x6 WOOD STUDS @ 16" O.C.
1/2" WOOD SHEATHING

PARTITION TYPE	STUD WIDTH / SPACING	PARTITION WIDTH		FIRE RESISTANCE RATING	UL #	STC RATING
		ACTUAL	NOMINAL			
D16	16" O.C.	6 1/2"	6"			

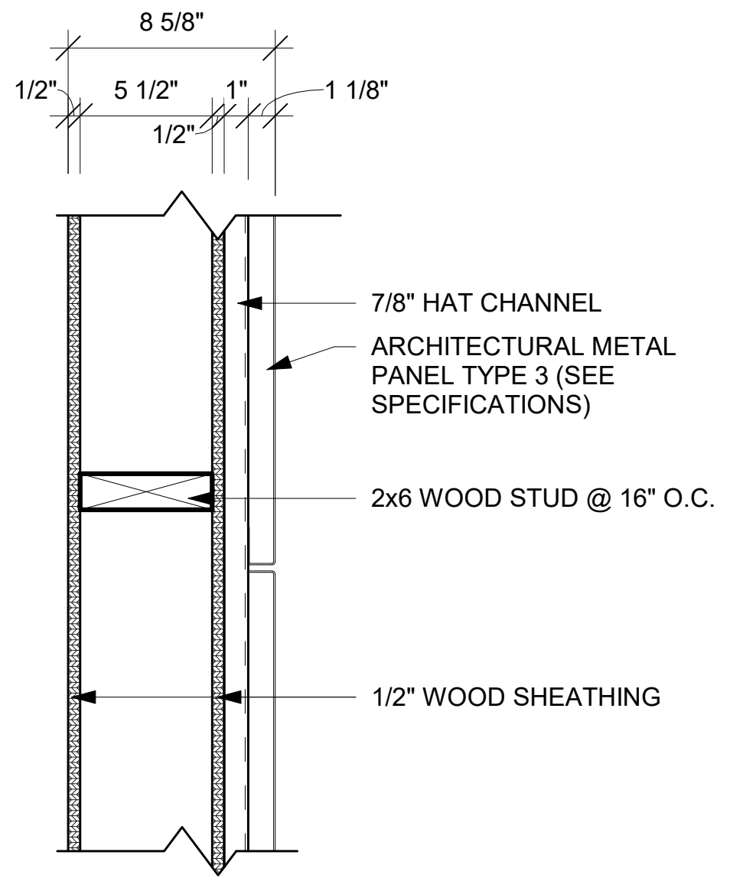
8 5/8"
1/2"
5 1/2"
1"
1 1/8"
1/2"
7/8" HAT CHANNEL
ARCHITECTURAL METAL PANEL TYPE 3 (SEE SPECIFICATIONS)
2x6 WOOD STUD @ 16" O.C.
1/2" WOOD SHEATHING

PARTITION TYPE	STUD WIDTH / SPACING	PARTITION WIDTH		FIRE RESISTANCE RATING	UL #	STC RATING
		ACTUAL	NOMINAL			
D17	16" O.C.	8 5/8"	9"			

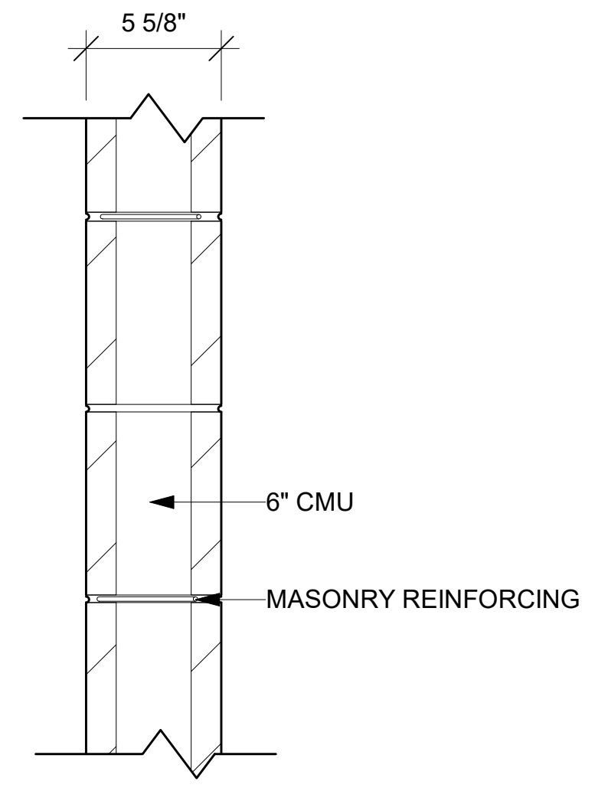
5 5/8"
6" CMU
MASONRY REINFORCING

PARTITION TYPE	STUD WIDTH / SPACING	PARTITION WIDTH		FIRE RESISTANCE RATING	UL #	STC RATING
		ACTUAL	NOMINAL			
B1		5 5/8"	6"			

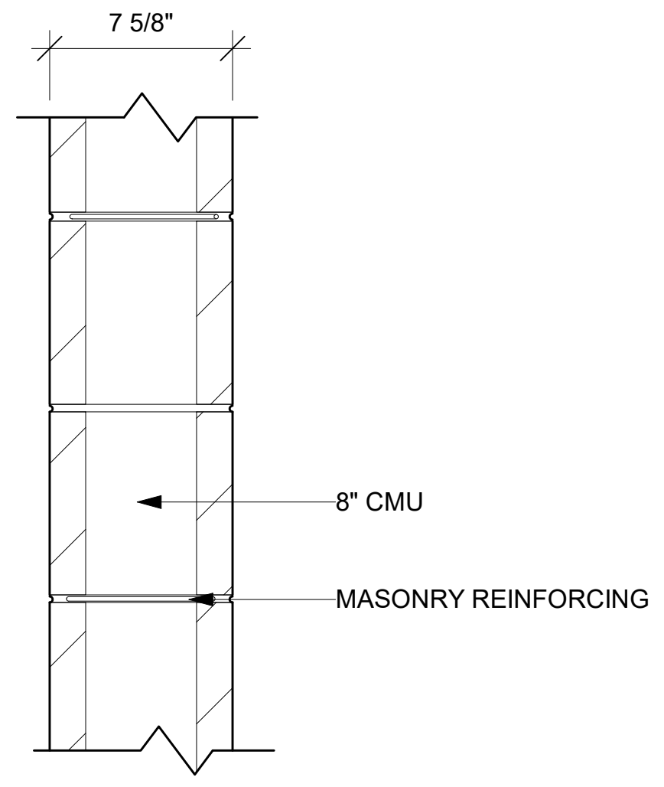
7 5/8"
8" CMU
MASONRY REINFORCING

PARTITION TYPE	STUD WIDTH / SPACING	PARTITION WIDTH		FIRE RESISTANCE RATING	UL #	STC RATING
		ACTUAL	NOMINAL			
B2		7 5/8"	8"			

GENERAL WALL TYPE NOTES:

A	REFER TO MASTER COLOR SCHEDULE AND INTERIOR DESIGN SHEETS FOR ADDITIONAL WALL FINISHES.
B	WHERE INTERIOR DESIGN SHEETS INDICATE WALL TILE, INSTALL BACKER BOARD AT WET AND NON-WET LOCATIONS AS LISTED IN 09 21 16
C	NON RATED WALLS, INCLUDING BULKHEADS SHALL HAVE FRAMEING EXTENDED TO DECK ABOVE. GYP BOARD SHALL EXTEND TO 4" ABOVE CEILING UNLESS NOTED OTHERWISE. COLUMN FURRING MAY STOP 4" ABOVE CEILING.
D	EXTEND STUDS, GYP BOARD AND SOUND BLANKET TO DECK ABOVE AT SOUND CONTROL WALLS (INDICATED BY SOUND ATTENUATION BLANKETS, SOUND SEAL NOTE OR STC RATING). LEVEL OF FINISH ABOVE CEILING AS NOTED IN SECTION 09 21 16
E	AT SOUND CONTROL WALLS (INDICATED BY SOUND ATTENUATION BLANKETS, SOUND SEAL NOTE OR STC RATING) APPLY CONTINUOUS BEAD OF ACOUSTICAL SEALANT AT FLOOR/CEILING TRACK STUDS AND STUD AT WALL. APPLY CONTINUOUS BEAD OF ACOUSTICAL SEALANT AT PERIMETER OF GYP BOARD HOLDING EDGE OF GYP BOARD AWAY FROM ADJACENT STRUCTURE NO MORE THAN 3/8". SEAL ALL M/E/P/FP PENETRATIONS WITH SOUND BLANKET, BACKING, ACOUSTICAL SEALANT AND FIRE STOPPING. AFTER INSTALLING ONE SIDE OF GYP BOARD, APPLY OVERSIZED 2" SOUND BLANKET OVER BACK SIDE OF ELECTRICAL BOXES AND SIMILAR PENETRATIONS. WHERE WALL BOXES OCCUR AT OPPOSITE SIDES, APPLY INSULATION TO BACKSIDE OF WALL BOXES. AT FIRE RATED WALLS REQUIRING SOUND CONTROL, USE PUTTY PADS FOR REQUIRED WALL RATING. REFER TO TOP OF WALL DETAILS FOR INSTALLATION OF ADDITIONAL MATERIALS AT DECK AND APPLICATION OF RATED TOP OF WALL ASSEMBLIES.
F	INSTALL GYPSUM BOARD CONTROL JOINTS AT TOP OF ALL INTERIOR TOP OF DOOR JAMBS TO TOP OF GYPSUM BOARD WALLS. OTHER CONTROL JOINTS TO BE INSTALLED PER PLAN OR AT 30'-0" O.C. MAX. REVIEW LOCATION REQUIREMENTS WITH A/E PRIOR TO START OF INSTALLATION OF GYPSUM BOARD ASSEMBLIES.
G	WHERE FIRE RATED WALLS ARE INDICATED BY WALL TYPE, USE UL OR EQUIVALENT APPROVED RATING SYSTEM INCLUDING TOP OF WALL AND PENETRATIONS.

RATED CMU WALL TABLE:

1 HOUR	MINIMUM 2.8 EQUIVALENT WALL THICKNESS
2 HOUR	MINIMUM 4.2 EQUIVALENT WALL THICKNESS

WALL ASSEMBLY R-VALUE COMPONENT TABLE:

COMPONENT	R-VALUE
FILM (INSIDE)	.68
5/8" GYP BOARD	.52
6" MTL STUD	- -
8" CMU	1.11
CONCRETE	.08 PER INCH (vault); .11 PER INCH (foundation)
5/8 GYP SHEAT	.69
FILM (OUTSIDE)	.17
RIGID FOAM	4.3 PER INCH
SPRAY FOAM	7 PER INCH
DEAD AIR	.85
BRICK	.44
STONE	.44
MTL PANEL	.62
SEE WALL TYPE FOR TOTAL WALL R-VALUE	

ARCHITECTURE
ENGINEERING
INTERIOR DESIGN

HSR ASSOCIATES INC.
100 MILWAUKEE STREET
LA CROSSE, WISCONSIN
PHONE: 608.784.1830
FAX: 608.782.5844
www.hsrassociates.com

Consultant:

Project Title:
WESTERN TECHNICAL COLLEGE
APPRENTICESHIP CENTER REMODEL

Project Location:
2860 21ST PL S
LA CROSSE, WI 54601

Sheet Title:
WALL TYPES

HSR Project Number:
19021

Project Date:
FEBRUARY 2020

Drawn By:
M.MALAND

Key Plan:

Revisions:

No.	Description	Date
A02	ADDENDUM #2	02/25/2020

Graphic Scale:
VARIES

Last Update:
2/25/2020 1:20:28 PM

A600

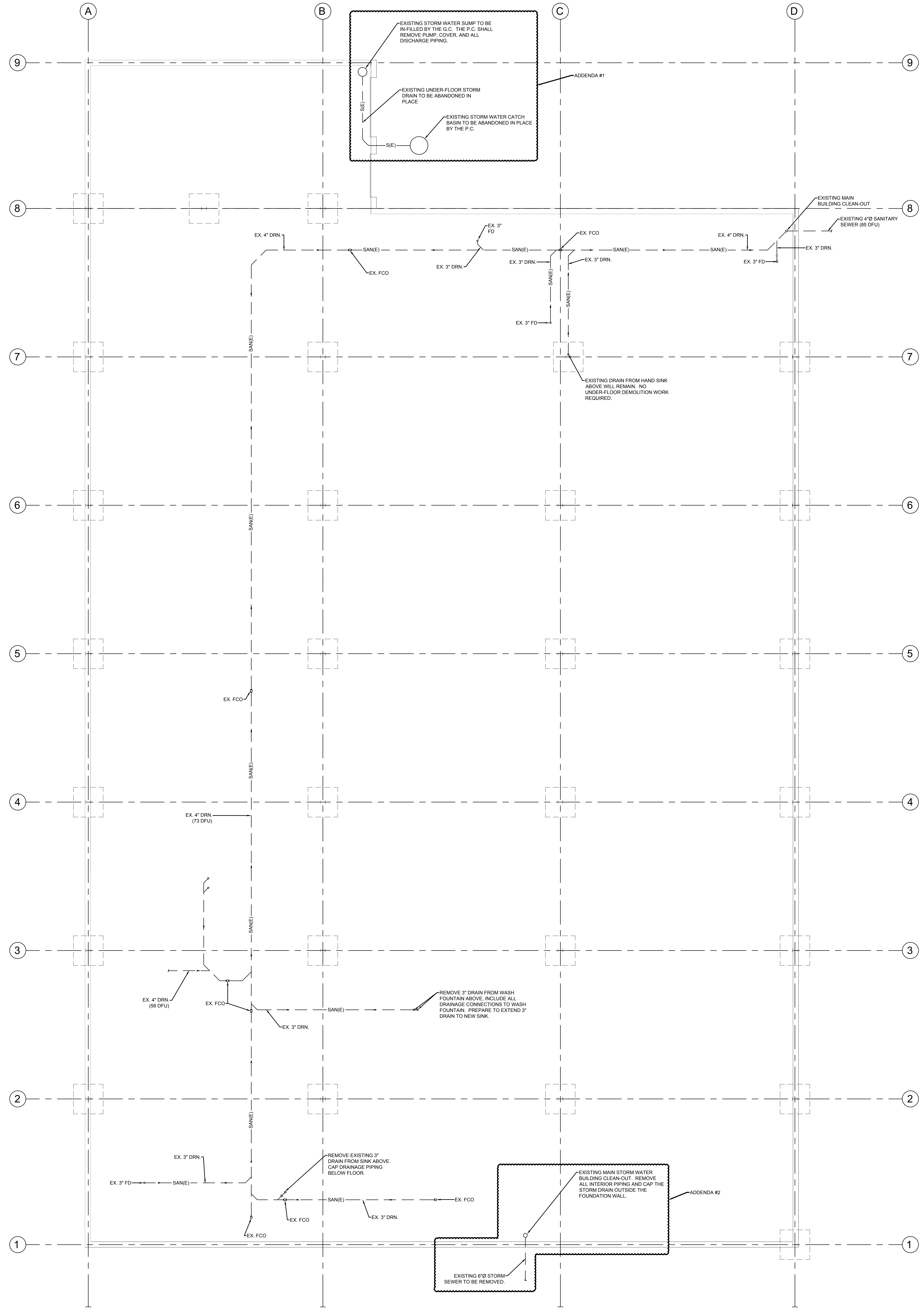
A
B
C
D
9
8
7
6
5
4
3
2
1
EXISTING STORM WATER SUMP TO BE IN-FILLED BY THE G.C. THE P.C. SHALL REMOVE PUMP, COVER, AND ALL DISCHARGE PIPING.
EXISTING UNDER-FLOOR STORM DRAIN TO BE ABANDONED IN PLACE
EXISTING STORM WATER CATCH BASIN TO BE ABANDONED IN PLACE BY THE P.C.
S(E)
S(E)
ADDENDA #1
EXISTING MAIN BUILDING CLEAN-OUT
EXISTING 4"Ø SANITARY SEWER (85 DFU)
EX. 4" DRN.
SAN(E)
EX. FCO
EX. 3" FD
EX. 3" DRN.
SAN(E)
EX. FCO
EX. 3" DRN.
EX. 3" DRN.
SAN(E)
SAN(E)
EX. 3" FD
SAN(E)
EX. 4" DRN.
EX. 3" DRN.
EX. 3" FD
EXISTING DRAIN FROM HAND SINK ABOVE WILL REMAIN. NO UNDER-FLOOR DEMOLITION WORK REQUIRED.
SAN(E)
SAN(E)
EX. FCO
SAN(E)
EX. 4" DRN. (73 DFU)
SAN(E)
EX. 4" DRN. (56 DFU)
EX. FCO
EX. 3" DRN.
SAN(E)
REMOVE 3" DRAIN FROM WASH FOUNTAIN ABOVE, INCLUDE ALL DRAINAGE CONNECTIONS TO WASH FOUNTAIN. PREPARE TO EXTEND 3" DRAIN TO NEW SINK.
SAN(E)
EX. 3" DRN.
EX. 3" FD
SAN(E)
REMOVE EXISTING 3" DRAIN FROM SINK ABOVE. CAP DRAINAGE PIPING BELOW FLOOR.
SAN(E)
EX. FCO
EX. FCO
EX. 3" DRN.
EX. FCO
EXISTING MAIN STORM WATER BUILDING CLEAN-OUT. REMOVE ALL INTERIOR PIPING AND CAP THE STORM DRAIN OUTSIDE THE FOUNDATION WALL.
ADDENDA #2
EXISTING 6"Ø STORM SEWER TO BE REMOVED.

1 PLUMBING UNDERFLOOR DEMOLITION PLAN
1/8" = 1'-0"

ARCHITECTURE
ENGINEERING
INTERIOR DESIGN

HSR ASSOCIATES INC.
100 MILWAUKEE STREET
LA CROSSE, WISCONSIN
PHONE: 608.784.1830
FAX: 608.782.5844
WEB SITE: www.hsrassociates.com

Consultant:

galileo CONSULTING GROUP
2920 EAST AVENUE SOUTH SUITE 102
LA CROSSE, WISCONSIN 54601
PHONE: (608) 787-9106 FAX: (608) 787-8995
E-MAIL: colson@galileo-group.us

Project Title:
WESTERN TECHNICAL COLLEGE
APPRENTICESHIP CENTER REMODEL

Project Location:
2860 21ST PL S
LA CROSSE, WI 54601

Sheet Title:
PLUMBING UNDERFLOOR DEMOLITION PLAN

HSR Project Number:
19021

Project Date:
FEBRUARY 4, 2020

Drawn By:
GALILEO

Key Plan:

Revisions:

No.	Description	Date

Graphic Scale:
(SEE DRAWING)

Last Update:

P090

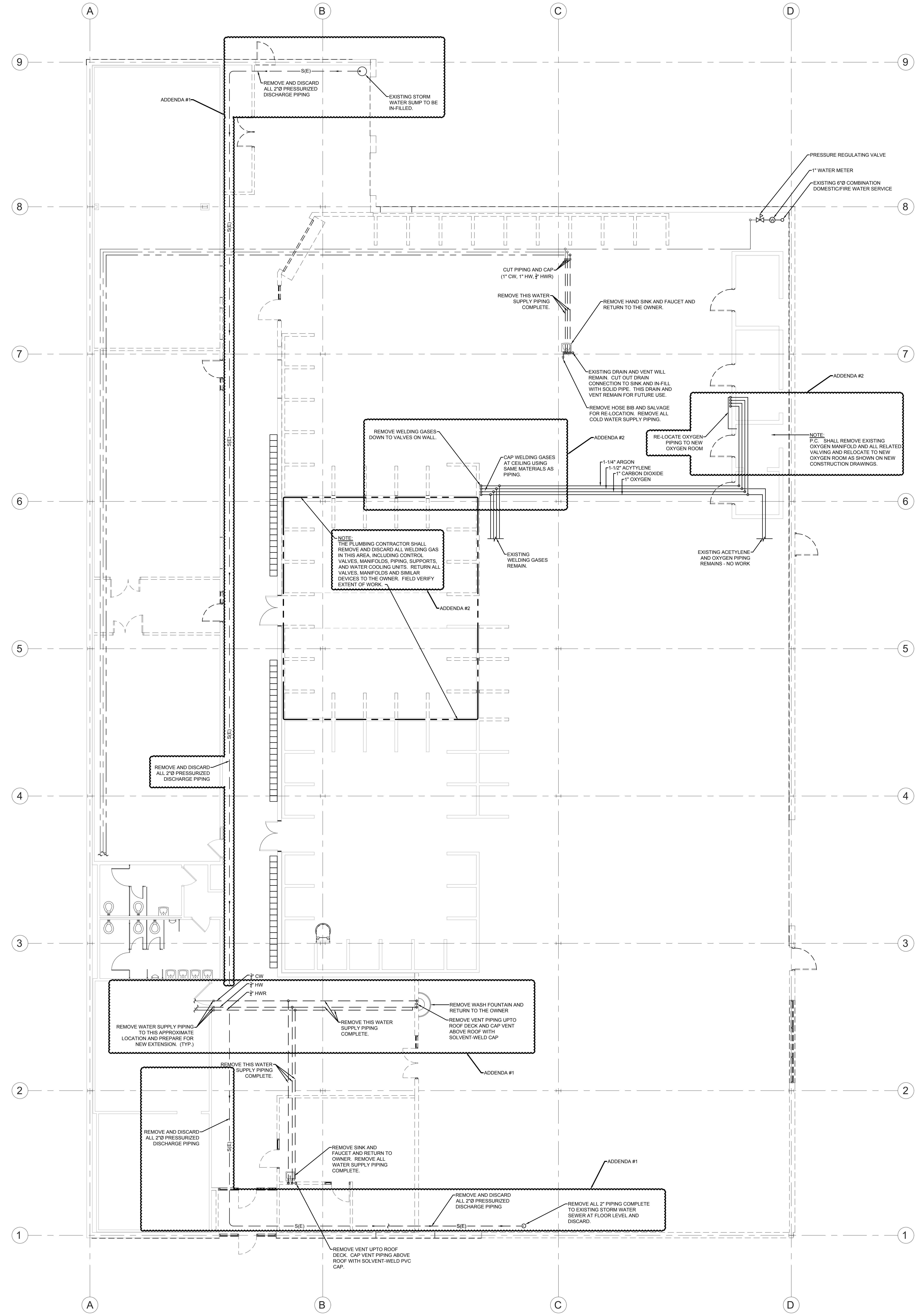
A
B
C
D
9
8
7
6
5
4
3
2
1
S(E)
REMOVE AND DISCARD ALL 2"Ø PRESSURIZED DISCHARGE PIPING
EXISTING STORM WATER SUMP TO BE IN-FILLED.
ADDENDA #1
PRESSURE REGULATING VALVE
1" WATER METER
EXISTING 6"Ø COMBINATION DOMESTIC/FIRE WATER SERVICE
CUT PIPING AND CAP (1" CW, 1" HW, ¾" HWR)
REMOVE THIS WATER SUPPLY PIPING COMPLETE.
REMOVE HAND SINK AND FAUCET AND RETURN TO THE OWNER.
EXISTING DRAIN AND VENT WILL REMAIN. CUT OUT DRAIN CONNECTION TO SINK AND IN-FILL WITH SOLID PIPE. THIS DRAIN AND VENT REMAIN FOR FUTURE USE.
REMOVE HOSE BIB AND SALVAGE FOR RE-LOCATION. REMOVE ALL COLD WATER SUPPLY PIPING.
ADDENDA #2
RE-LOCATE OXYGEN PIPING TO NEW OXYGEN ROOM
NOTE:
P.C. SHALL REMOVE EXISTING OXYGEN MANIFOLD AND ALL RELATED VALVING AND RELOCATE TO NEW OXYGEN ROOM AS SHOWN ON NEW CONSTRUCTION DRAWINGS.
REMOVE WELDING GASES DOWN TO VALVES ON WALL.
ADDENDA #2
CAP WELDING GASES AT CEILING USING SAME MATERIALS AS PIPING.
1-1/4" ARGON
1-1/2" ACYTYLENE
1" CARBON DIOXIDE
1" OXYGEN
EXISTING WELDING GASES REMAIN.
EXISTING ACETYLENE AND OXYGEN PIPING REMAINS - NO WORK
NOTE:
THE PLUMBING CONTRACTOR SHALL REMOVE AND DISCARD ALL WELDING GAS IN THIS AREA, INCLUDING CONTROL VALVES, MANIFOLDS, PIPING, SUPPORTS, AND WATER COOLING UNITS. RETURN ALL VALVES, MANIFOLDS AND SIMILAR DEVICES TO THE OWNER. FIELD VERIFY EXTENT OF WORK.
ADDENDA #2
REMOVE AND DISCARD ALL 2"Ø PRESSURIZED DISCHARGE PIPING
¾" CW
¾" HW
¾" HWR
REMOVE WATER SUPPLY PIPING TO THIS APPROXIMATE LOCATION AND PREPARE FOR NEW EXTENSION. (TYP.)
REMOVE THIS WATER SUPPLY PIPING COMPLETE.
REMOVE WASH FOUNTAIN AND RETURN TO THE OWNER
REMOVE VENT PIPING UPTO ROOF DECK AND CAP VENT ABOVE ROOF WITH SOLVENT-WELD CAP
ADDENDA #1
REMOVE THIS WATER SUPPLY PIPING COMPLETE.
REMOVE AND DISCARD ALL 2"Ø PRESSURIZED DISCHARGE PIPING
REMOVE SINK AND FAUCET AND RETURN TO OWNER. REMOVE ALL WATER SUPPLY PIPING COMPLETE.
ADDENDA #1
REMOVE AND DISCARD ALL 2"Ø PRESSURIZED DISCHARGE PIPING
REMOVE ALL 2" PIPING COMPLETE TO EXISTING STORM WATER SEWER AT FLOOR LEVEL AND DISCARD.
REMOVE VENT UPTO ROOF DECK. CAP VENT PIPING ABOVE ROOF WITH SOLVENT-WELD PVC CAP.

1 PLUMBING FIRST FLOOR DEMOLITION PLAN
1/8" = 1'-0"

ARCHITECTURE
ENGINEERING
INTERIOR DESIGN

HSR ASSOCIATES INC.
100 MILWAUKEE STREET
LA CROSSE, WISCONSIN
PHONE: 608.784.1830
FAX: 608.782.5844
WEB SITE: www.hsrassociates.com

Consultant:

CONSULTING GROUP
2920 EAST AVENUE SOUTH SUITE 102
LA CROSSE, WISCONSIN 54601
PHONE: (608) 787-9106 FAX: (608) 787-8995
E-MAIL: colson@galileo-group.us

Project Title:
WESTERN TECHNICAL COLLEGE
APPRENTICESHIP CENTER REMODEL

Project Location:
2860 21ST PL S
LA CROSSE, WI 54601

Sheet Title:
PLUMBING FIRST FLOOR DEMOLITION PLAN

HSR Project Number:
19021

Project Date:
FEBRUARY 4, 2020

Drawn By:
GALILEO

Key Plan:

Revisions:

No.	Description	Date

Graphic Scale:
(SEE DRAWING)

Last Update:

P091

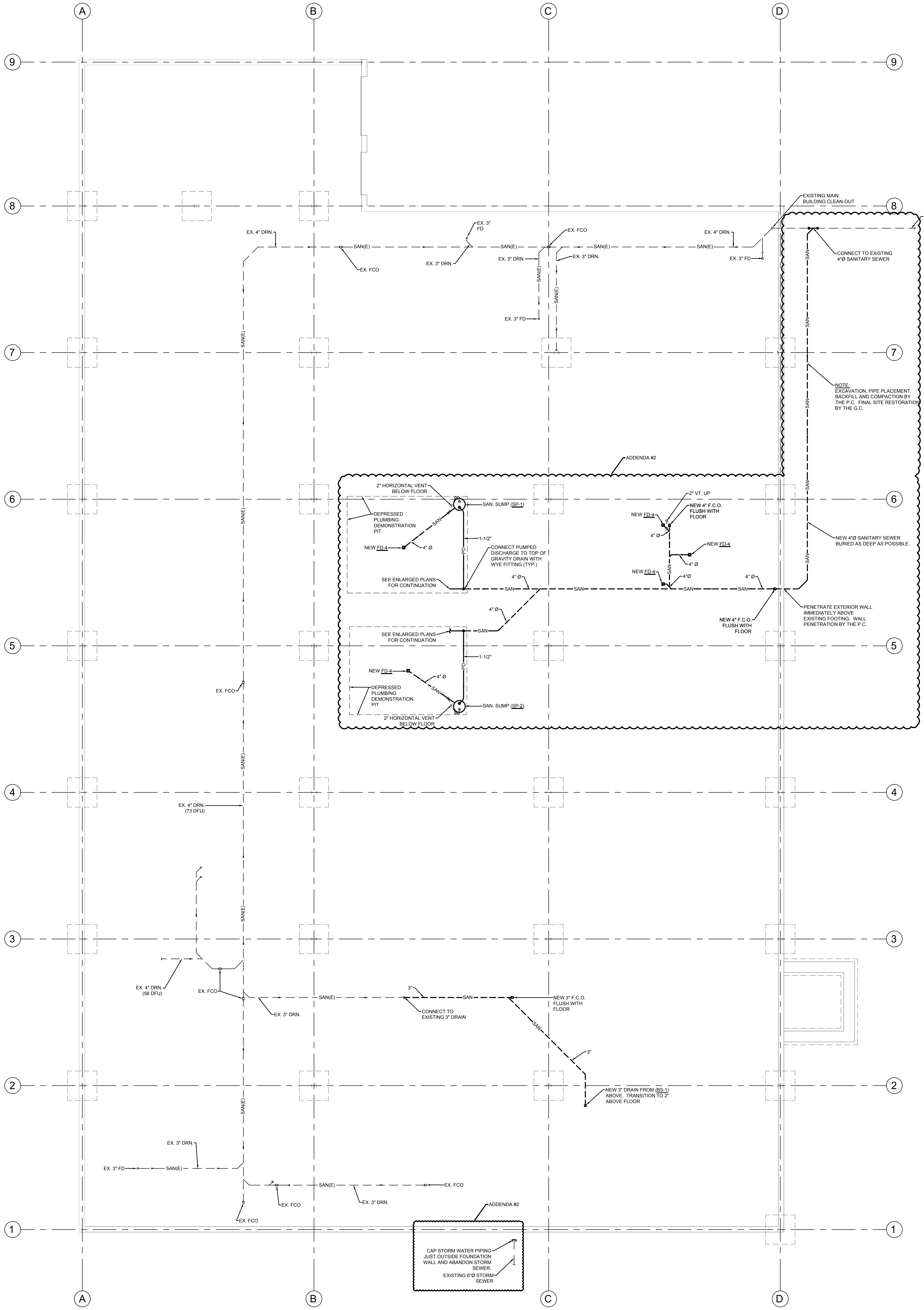
A
B
C
D
9
8
7
6
5
4
3
2
1
EXISTING MAIN BUILDING CLEAN-OUT
EXISTING 4"Ø SANITARY SEWER (85 DFU)
EX. 4" DRN.
SAN(E)
EX. FCO
EX. 3" FD
EX. 3" DRN.
EX. 3" DRN.
EX. 3" FD
EX. 3" DRN.
EX. 4" DRN.
EX. 3" FD
SAN
CONNECT TO EXISTING 4"Ø SANITARY SEWER
NOTE: EXCAVATION, PIPE PLACEMENT, BACKFILL AND COMPACTION BY THE P.C. FINAL SITE RESTORATION BY THE G.C.
ADDENDA #2
2" HORIZONTAL VENT BELOW FLOOR
DEPRESSED PLUMBING DEMONSTRATION PIT
SAN. SUMP (SP-1)
NEW FD-4
4" Ø
1-1/2"
PD
CONNECT PUMPED DISCHARGE TO TOP OF GRAVITY DRAIN WITH WYE FITTING (TYP.)
SEE ENLARGED PLANS FOR CONTINUATION
2" VT. UP
NEW 4" F.C.O. FLUSH WITH FLOOR
NEW FD-4
4" Ø
NEW FD-4
4"Ø
NEW 4"Ø SANITARY SEWER BURIED AS DEEP AS POSSIBLE.
NEW 4" F.C.O. FLUSH WITH FLOOR
PENETRATE EXTERIOR WALL IMMEDIATELY ABOVE EXISTING FOOTING. WALL PENETRATION BY THE P.C.
SEE ENLARGED PLANS FOR CONTINUATION
NEW FD-4
DEPRESSED PLUMBING DEMONSTRATION PIT
SAN. SUMP (SP-2)
2" HORIZONTAL VENT BELOW FLOOR
EX. FCO
EX. 4" DRN. (73 DFU)
EX. 4" DRN. (56 DFU)
EX. FCO
EX. 3" DRN.
3"
CONNECT TO EXISTING 3" DRAIN
NEW 3" F.C.O. FLUSH WITH FLOOR
NEW 3" DRAIN FROM (BS-1) ABOVE. TRANSITION TO 2" ABOVE FLOOR
EX. 3" DRN.
EX. 3" FD
EX. FCO
EX. 3" DRN.
EX. FCO
EX. FCO
ADDENDA #2
CAP STORM WATER PIPING JUST OUTSIDE FOUNDATION WALL AND ABANDON STORM SEWER.
EXISTING 6"Ø STORM SEWER

1 PLUMBING UNDERFLOOR PLAN – NEW WORK
1/8" = 1'-0"

ARCHITECTURE
ENGINEERING
INTERIOR DESIGN

HSR ASSOCIATES INC.
100 MILWAUKEE STREET
LA CROSSE, WISCONSIN
PHONE: 608.784.1830
FAX: 608.782.5844
WEB SITE: www.hsrassociates.com

Consultant:

galileo CONSULTING GROUP
2920 EAST AVENUE SOUTH SUITE 102
LA CROSSE, WISCONSIN 54601
PHONE: (608) 787-9106 FAX: (608) 787-8995
E-MAIL: colson@galileo-group.us

Project Title: **WESTERN TECHNICAL COLLEGE APPRENTICESHIP CENTER REMODEL**

Project Location: **2860 21ST PL S**
LA CROSSE, WI 54601

Sheet Title: **PLUMBING UNDERFLOOR PLAN - NEW WORK**

HSR Project Number:
19021

Project Date:
FEBRUARY 4, 2020

Drawn By:
GALILEO

Key Plan:

Revisions:

No.	Description	Date

Graphic Scale:
(SEE DRAWING)

Last Update:

P100

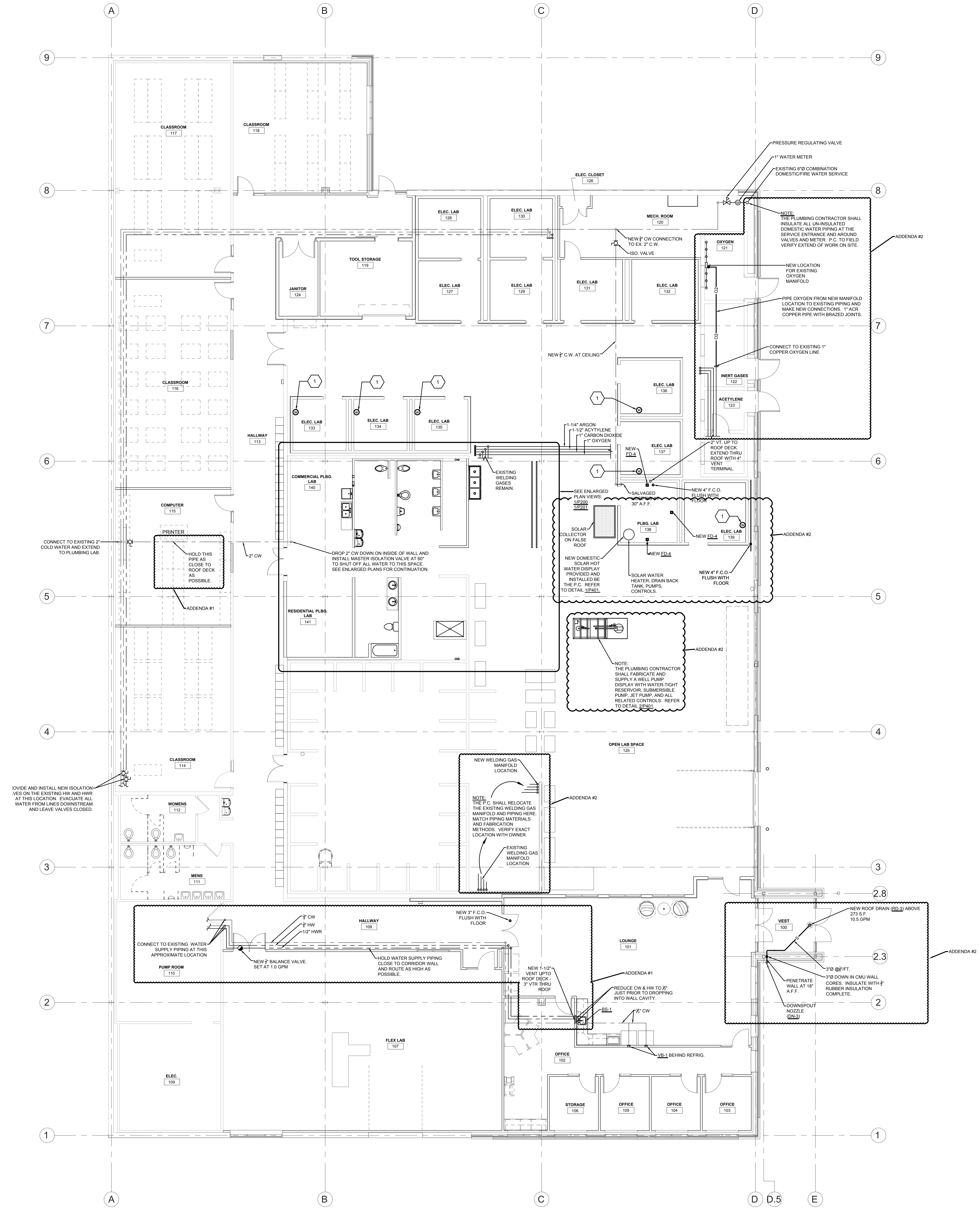
A
B
C
D
9
8
7
6
5
4
3
2.8
2.3
2
1
D.5
E
CLASSROOM
117
CLASSROOM
118
ELEC. CLOSET
126
ELEC. LAB
128
ELEC. LAB
130
MECH. ROOM
120
TOOL STORAGE
119
JANITOR
124
ELEC. LAB
127
ELEC. LAB
129
ELEC. LAB
131
ELEC. LAB
132
PRESSURE REGULATING VALVE
1" WATER METER
EXISTING 6"Ø COMBINATION DOMESTIC/FIRE WATER SERVICE
NOTE:
THE PLUMBING CONTRACTOR SHALL INSULATE ALL UN-INSULATED DOMESTIC WATER PIPING AT THE SERVICE ENTRANCE AND AROUND VALVES AND METER. P.C. TO FIELD VERIFY EXTEND OF WORK ON SITE.
ADDENDA #2
NEW ¾" CW CONNECTION TO EX. 2" C.W.
ISO. VALVE
OXYGEN
121
NEW LOCATION FOR EXISTING OXYGEN MANIFOLD
PIPE OXYGEN FROM NEW MANIFOLD LOCATION TO EXISTING PIPING AND MAKE NEW CONNECTIONS. 1" ACR COPPER PIPE WITH BRAZED JOINTS.
O2
NEW ¾" C.W. AT CEILING
CONNECT TO EXISTING 1" COPPER OXYGEN LINE
INERT GASES
122
ACETYLENE
123
CLASSROOM
116
HALLWAY
113
1
ELEC. LAB
133
ELEC. LAB
134
ELEC. LAB
135
ELEC. LAB
136
W
1-1/4" ARGON
1-1/2" ACYTYLENE
1" CARBON DIOXIDE
1" OXYGEN
NEW FD-4
ELEC. LAB
137
2" VT. UP TO ROOF DECK. EXTEND THRU ROOF WITH 4" VENT TERMINAL.
COMMERCIAL PLBG. LAB
140
EXISTING WELDING GASES REMAIN.
SEE ENLARGED PLAN VIEWS: 1/P200 1/P201
SALVAGED HOSE BIB AT 30" A.F.F.
NEW 4" F.C.O. FLUSH WITH FLOOR
COMPUTER
115
PRINTER
CONNECT TO EXISTING 2" COLD WATER AND EXTEND TO PLUMBING LAB.
HOLD THIS PIPE AS CLOSE TO ROOF DECK AS POSSIBLE.
2" CW
DROP 2" CW DOWN ON INSIDE OF WALL AND INSTALL MASTER ISOLATION VALVE AT 60" TO SHUT OFF ALL WATER TO THIS SPACE. SEE ENLARGED PLANS FOR CONTINUATION.
SOLAR COLLECTOR ON FALSE ROOF
PLBG. LAB
138
NEW FD-4
ELEC. LAB
139
ADDENDA #2
NEW DOMESTIC SOLAR HOT WATER DISPLAY PROVIDED AND INSTALLED BE THE P.C. REFER TO DETAIL 1/P401.
SOLAR WATER HEATER, DRAIN BACK TANK, PUMPS, CONTROLS.
NEW FD-4
NEW 4" F.C.O. FLUSH WITH FLOOR
ADDENDA #1
RESIDENTIAL PLBG. LAB
141
ADDENDA #2
NOTE:
THE PLUMBING CONTRACTOR SHALL FABRICATE AND SUPPLY A WELL PUMP DISPLAY WITH WATER-TIGHT RESERVOIR, SUBMERSIBLE PUMP, JET PUMP, AND ALL RELATED CONTROLS. REFER TO DETAIL 2/P401.
OPEN LAB SPACE
125
CLASSROOM
114
NEW WELDING GAS MANIFOLD LOCATION
ADDENDA #2
NOTE:
THE P.C. SHALL RELOCATE THE EXISTING WELDING GAS MANIFOLD AND PIPING HERE. MATCH PIPING MATERIALS AND FABRICATION METHODS. VERIFY EXACT LOCATION WITH OWNER.
EXISTING WELDING GAS MANIFOLD LOCATION
OVIDE AND INSTALL NEW ISOLATION VES ON THE EXISTING HW AND HWR AT THIS LOCATION. EVACUATE ALL WATER FROM LINES DOWNSTREAM AND LEAVE VALVES CLOSED.
WOMENS
112
MENS
111
¾" CW
¾" HW
1/2" HWR
HALLWAY
108
NEW 3" F.C.O. FLUSH WITH FLOOR
CONNECT TO EXISTING WATER SUPPLY PIPING AT THIS APPROXIMATE LOCATION
PUMP ROOM
110
NEW ½" BALANCE VALVE. SET AT 1.0 GPM
HOLD WATER SUPPLY PIPING CLOSE TO CORRIDOR WALL AND ROUTE AS HIGH AS POSSIBLE.
LOUNGE
101
NEW 1-1/2" VENT UPTO ROOF DECK - 3" VTR THRU ROOF
ADDENDA #1
REDUCE CW & HW TO ½" JUST PRIOR TO DROPPING INTO WALL CAVITY.
BS-1
½" CW
VB-1 BEHIND REFRIG.
VEST
100
NEW ROOF DRAIN (RD-3) ABOVE 273 S.F. 10.5 GPM
S
3"Ø @⅛"/FT.
3"Ø DOWN IN CMU WALL CORES. INSULATE WITH ¾" RUBBER INSULATION COMPLETE.
PENETRATE WALL AT 18" A.F.F.
DOWNSPOUT NOZZLE (DN-3)
ADDENDA #2
FLEX LAB
107
OFFICE
102
ELEC.
109
STORAGE
106
OFFICE
105
OFFICE
104
OFFICE
103

1 PLUMBING FLOOR PLAN – NEW WORK
1/8" = 1'-0"

ARCHITECTURE
ENGINEERING
INTERIOR DESIGN

HSR ASSOCIATES INC.
100 MILWAUKEE STREET
LA CROSSE, WISCONSIN
PHONE: 608.784.1830
FAX: 608.782.5844
WEB SITE: www.hsrassociates.com

Consultant:

galileo
CONSULTING GROUP
2920 EAST AVENUE SOUTH SUITE 102
LA CROSSE, WISCONSIN 54601
PHONE: (608) 787-9106 FAX: (608) 787-8995
E-MAIL: colson@galileo-group.us

Project Title: **WESTERN TECHNICAL COLLEGE**
APPRENTICESHIP CENTER REMODEL

Project Location: **2860 21ST PL S**
LA CROSSE, WI 54601

Sheet Title: **PLUMBING FLOOR PLAN - NEW WORK**

HSR Project Number:
19021

Project Date:
FEBRUARY 4, 2020

Drawn By:
GALILEO

Key Plan:

Revisions:

No.	Description	Date

Graphic Scale:
(SEE DRAWING)

Last Update:

P101

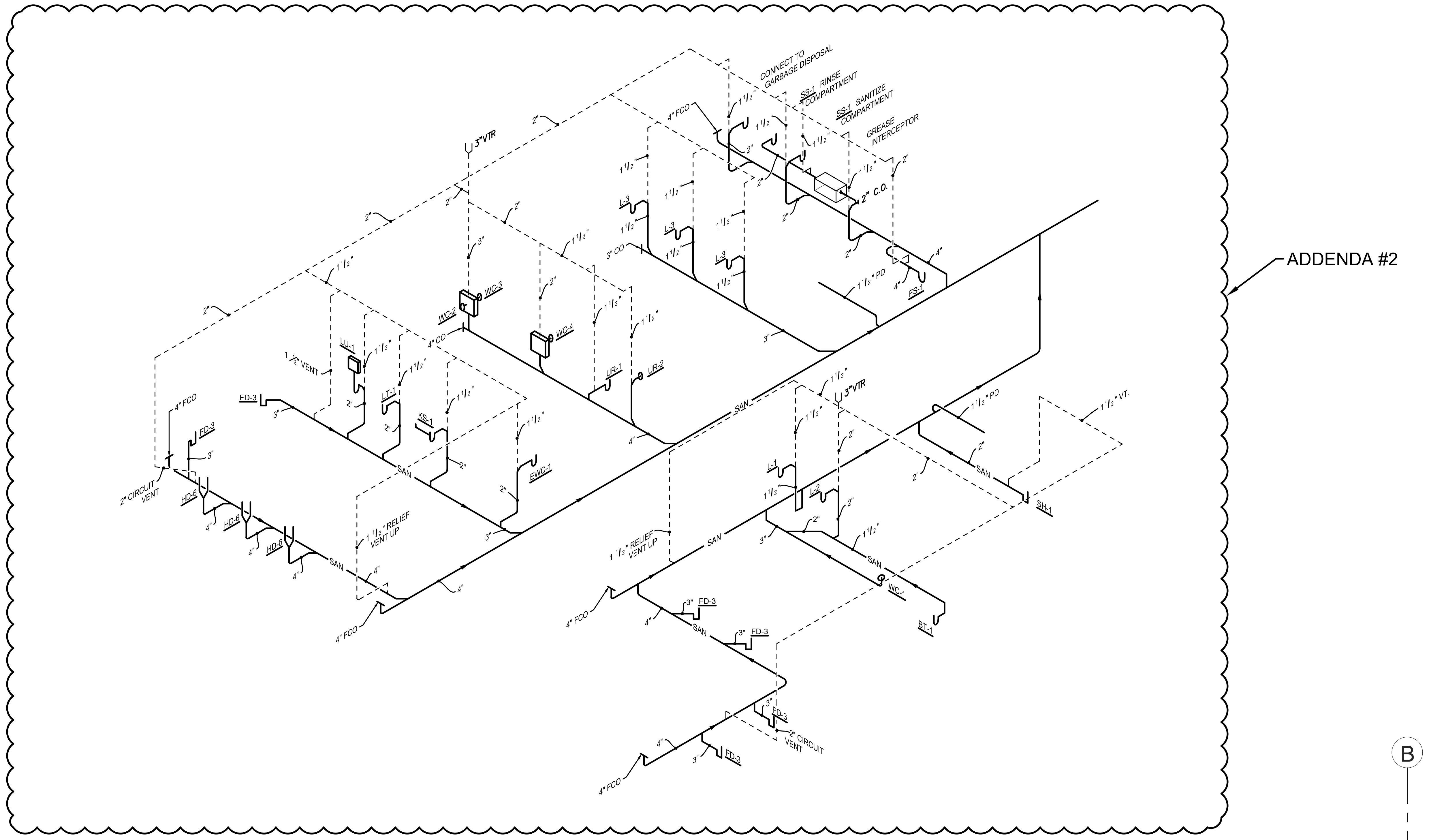
ADDENDA #2
CONNECT TO GARBAGE DISPOSAL
SS-1 RINSE COMPARTMENT
SS-1 SANITIZE COMPARTMENT
GREASE INTERCEPTOR
4" FCO
3"VTR
2" C.O.
3" CO
4" CO
1 1/2" VENT
1 1/2" PD
1 1/2" VT.
1 1/2" RELIEF VENT UP
2" CIRCUIT VENT
L-1
L-2
L-3
LU-1
LT-1
KS-1
WC-1
WC-2
WC-3
WC-4
UR-1
UR-2
EWC-1
FS-1
FD-3
HD-6
SH-1
BT-1
SAN
1 1/2"
2"
3"
4"

2 DRAIN AND VENT ISOMETRIC – PLUMBING LAB

NONE

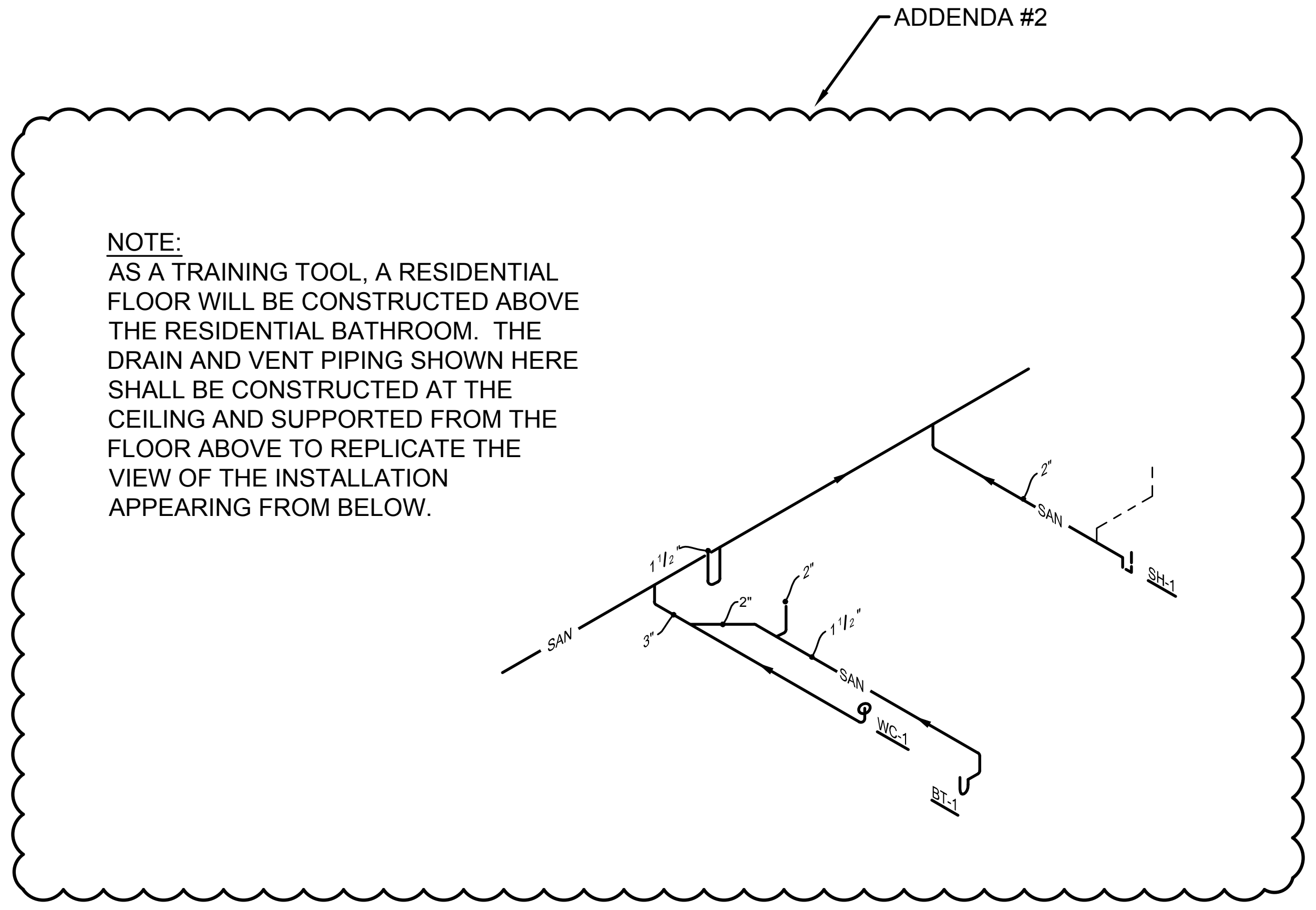
ADDENDA #2
SAN
1 1/2"
2"
3"
WC-1
SH-1
BT-1

NOTE:
AS A TRAINING TOOL, A RESIDENTIAL FLOOR WILL BE CONSTRUCTED ABOVE THE RESIDENTIAL BATHROOM. THE DRAIN AND VENT PIPING SHOWN HERE SHALL BE CONSTRUCTED AT THE CEILING AND SUPPORTED FROM THE FLOOR ABOVE TO REPLICATE THE VIEW OF THE INSTALLATION APPEARING FROM BELOW.

3 DRAIN AND VENT ISOMETRIC – SIMULATION

NONE

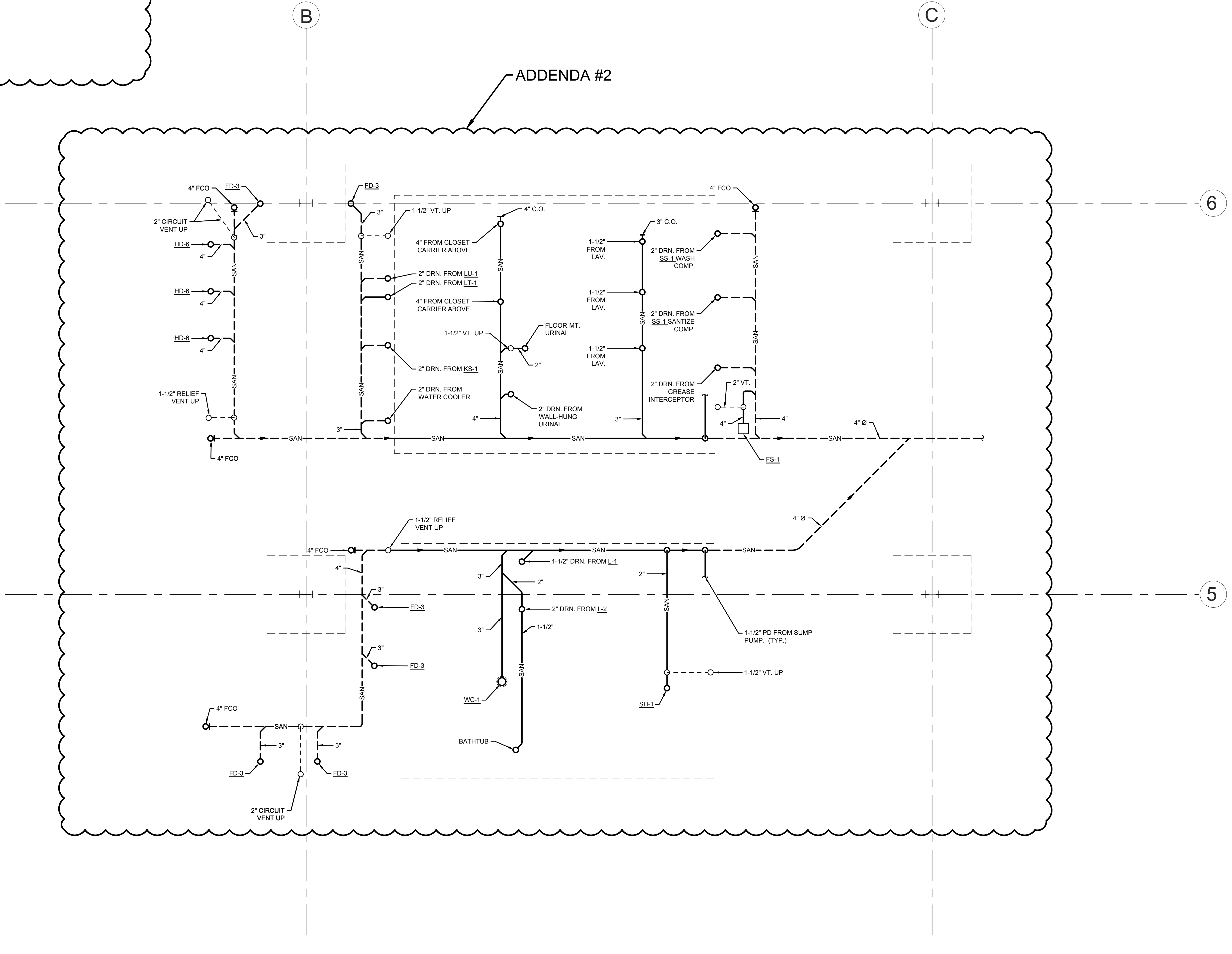
B
C
6
5
ADDENDA #2
4" FCO
FD-3
2" CIRCUIT VENT UP
3"
HD-6
4"
SAN
1-1/2" RELIEF VENT UP
1-1/2" VT. UP
4" C.O.
4" FROM CLOSET CARRIER ABOVE
2" DRN. FROM LU-1
2" DRN. FROM LT-1
FLOOR-MT. URINAL
2"
2" DRN. FROM KS-1
2" DRN. FROM WATER COOLER
2" DRN. FROM WALL-HUNG URINAL
1-1/2" FROM LAV.
3" C.O.
2" DRN. FROM SS-1 WASH COMP.
2" DRN. FROM SS-1 SANTIZE COMP.
2" DRN. FROM GREASE INTERCEPTOR
2" VT.
FS-1
4" Ø
1-1/2" DRN. FROM L-1
2" DRN. FROM L-2
1-1/2"
WC-1
BATHTUB
SH-1
1-1/2" PD FROM SUMP PUMP. (TYP.)
1-1/2" VT. UP

1 PLUMBING LAB UNDERFLOOR PLAN

1/4" = 1'-0"

ARCHITECTURE
ENGINEERING
INTERIOR DESIGN

HSR ASSOCIATES INC.
100 MILWAUKEE STREET
LA CROSSE, WISCONSIN
PHONE: 608.784.1830
FAX: 608.782.5844
WEB SITE: www.hsrassociates.com

Consultant:

galileo
CONSULTING GROUP

Project Title:
WESTERN TECHNICAL COLLEGE
APPRENTICESHIP CENTER REMODEL

Project Location: **2860 21ST PL S**
LA CROSSE, WI 54601

Sheet Title: **PLUMBING ENLARGED UNDERFLOOR PLAN**

HSR Project Number:
19021

Project Date:
FEBRUARY 4, 2020

Drawn By:
GALILEO

Key Plan:

Revisions:

No.	Description	Date

Graphic Scale:
(SEE DRAWING)

Last Update:

P200

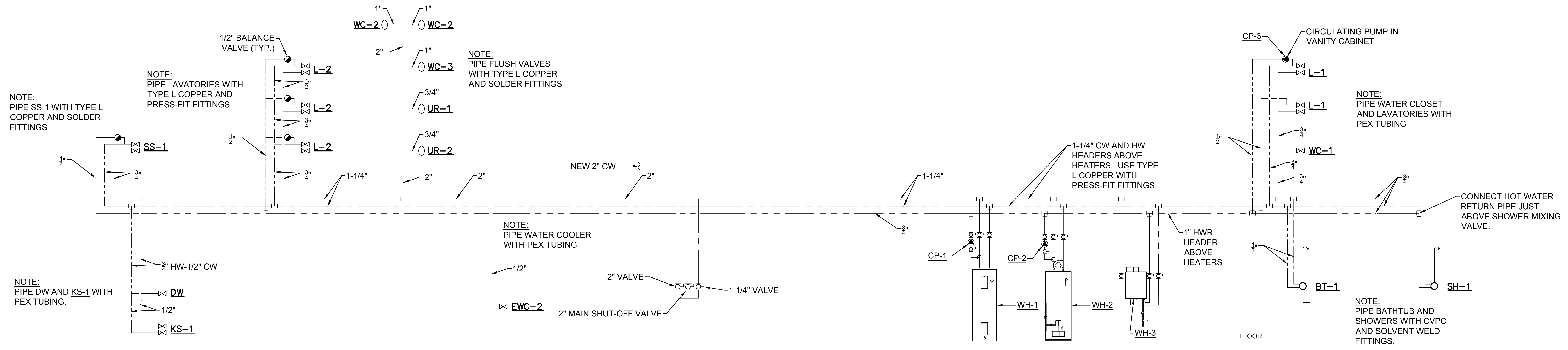
1/2" BALANCE VALVE (TYP.)
SS-1
L-2
L-2
L-2
WC-2
WC-2
WC-3
UR-1
UR-2
1"
1"
2"
1"
3/4"
3/4"
1-1/4"
2"
2"
NEW 2" CW
2"
3/4" HW-1/2" CW
DW
1/2"
KS-1
1/2"
EWC-2
2" VALVE
1-1/4" VALVE
2" MAIN SHUT-OFF VALVE
1-1/4"
1-1/4" CW AND HW HEADERS ABOVE HEATERS. USE TYPE L COPPER WITH PRESS-FIT FITTINGS.
CP-1
CP-2
WH-1
WH-2
WH-3
1" HWR HEADER ABOVE HEATERS
FLOOR
CP-3
CIRCULATING PUMP IN VANITY CABINET
L-1
L-1
WC-1
BT-1
SH-1
CONNECT HOT WATER RETURN PIPE JUST ABOVE SHOWER MIXING VALVE.

NOTE: PIPE SS-1 WITH TYPE L COPPER AND SOLDER FITTINGS

NOTE: PIPE LAVATORIES WITH TYPE L COPPER AND PRESS-FIT FITTINGS

NOTE: PIPE FLUSH VALVES WITH TYPE L COPPER AND SOLDER FITTINGS

NOTE: PIPE DW AND KS-1 WITH PEX TUBING.

NOTE: PIPE WATER COOLER WITH PEX TUBING

NOTE: PIPE WATER CLOSET AND LAVATORIES WITH PEX TUBING

NOTE: PIPE BATHTUB AND SHOWERS WITH CVPC AND SOLVENT WELD FITTINGS.

3 DOMESTIC WATER PIPING MATERIAL DIRECTION
NONE

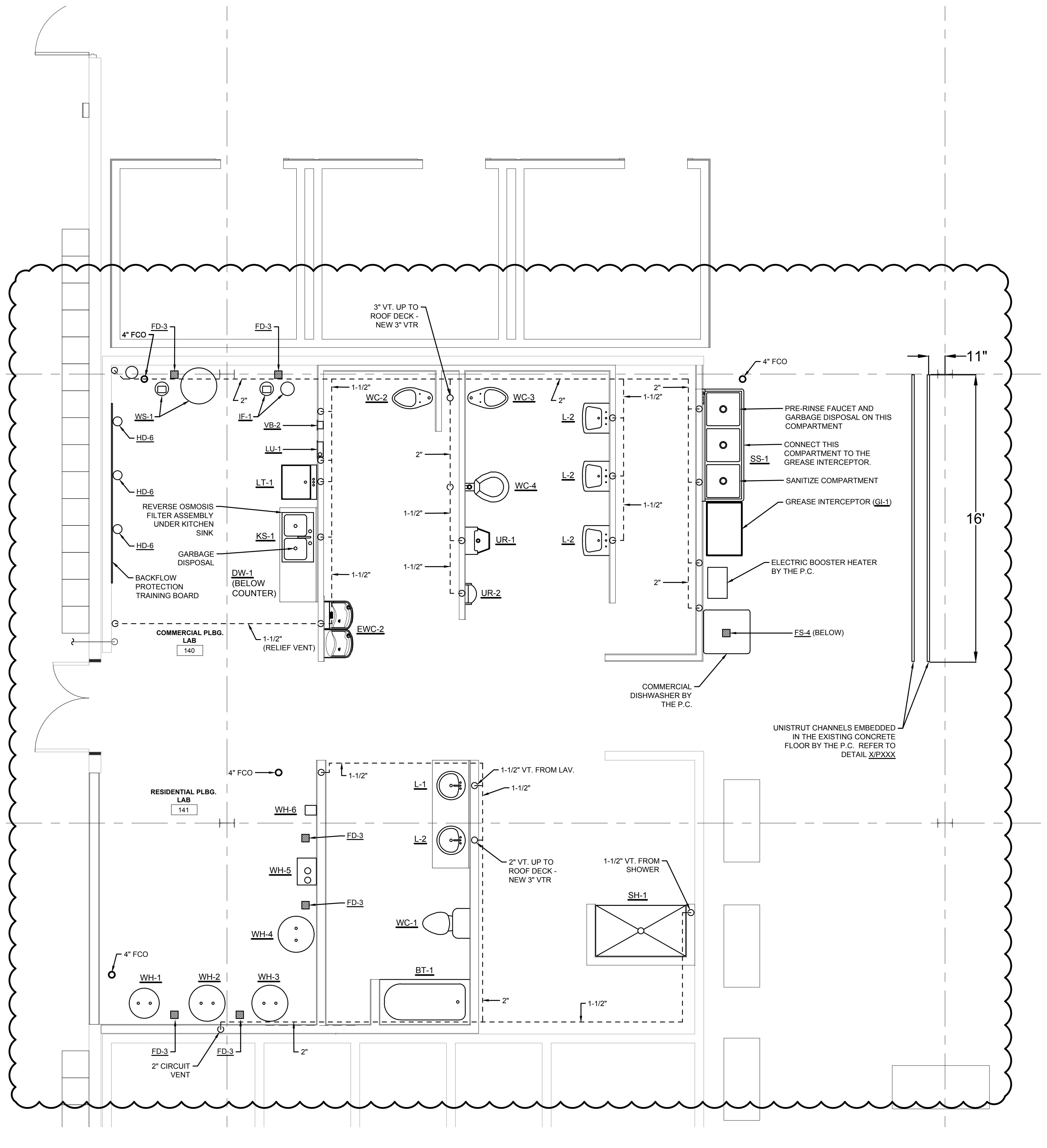
4" FCO
FD-3
FD-3
3" VT. UP TO ROOF DECK - NEW 3" VTR
4" FCO
11"
16'
WS-1
IF-1
VB-2
LU-1
LT-1
KS-1
HD-6
HD-6
HD-6
REVERSE OSMOSIS FILTER ASSEMBLY UNDER KITCHEN SINK
GARBAGE DISPOSAL
BACKFLOW PROTECTION TRAINING BOARD
DW-1 (BELOW COUNTER)
WC-2
WC-3
WC-4
UR-1
UR-2
L-2
L-2
L-2
EWC-2
1-1/2"
2"
1-1/2" (RELIEF VENT)
COMMERCIAL PLBG. LAB
140
PRE-RINSE FAUCET AND GARBAGE DISPOSAL ON THIS COMPARTMENT
CONNECT THIS COMPARTMENT TO THE GREASE INTERCEPTOR.
SS-1
SANITIZE COMPARTMENT
GREASE INTERCEPTOR (GI-1)
ELECTRIC BOOSTER HEATER BY THE P.C.
FS-4 (BELOW)
COMMERCIAL DISHWASHER BY THE P.C.
UNISTRUT CHANNELS EMBEDDED IN THE EXISTING CONCRETE FLOOR BY THE P.C. REFER TO DETAIL X/PXXX
RESIDENTIAL PLBG. LAB
141
4" FCO
1-1/2"
1-1/2" VT. FROM LAV.
L-1
L-2
2" VT. UP TO ROOF DECK - NEW 3" VTR
WH-6
FD-3
WH-5
FD-3
WH-4
WC-1
1-1/2" VT. FROM SHOWER
SH-1
BT-1
4" FCO
WH-1
WH-2
WH-3
2"
1-1/2"
FD-3
FD-3
2" CIRCUIT VENT
2"

2 PLUMBING ENLARGED FIRST FLOOR PLAN – DRAIN & VENT PLAN
1/4" = 1'-0"

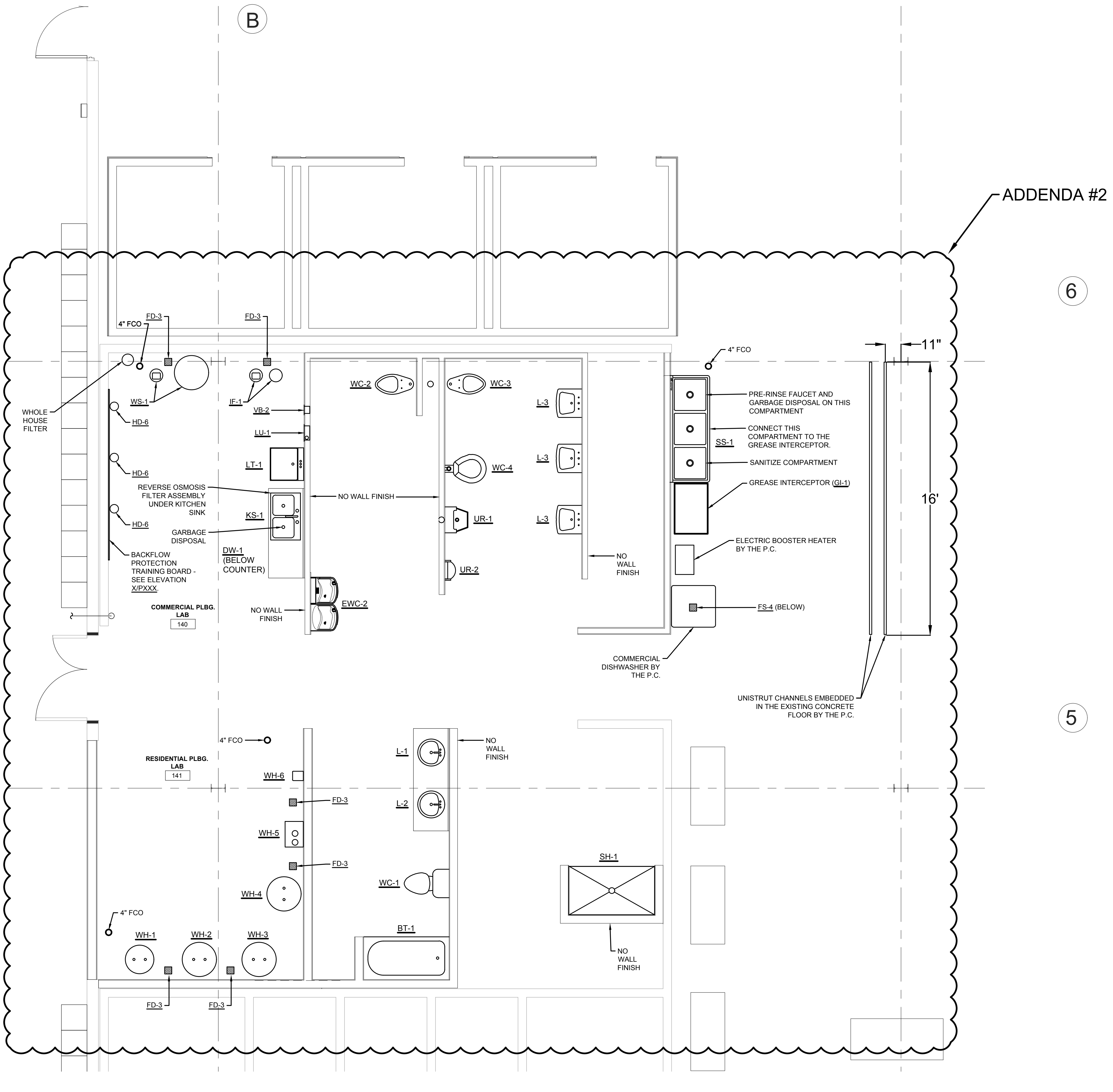
B
ADDENDA #2
6
5
4" FCO
FD-3
FD-3
WHOLE HOUSE FILTER
WS-1
IF-1
VB-2
LU-1
LT-1
KS-1
HD-6
HD-6
HD-6
REVERSE OSMOSIS FILTER ASSEMBLY UNDER KITCHEN SINK
GARBAGE DISPOSAL
BACKFLOW PROTECTION TRAINING BOARD - SEE ELEVATION X/PXXX.
DW-1 (BELOW COUNTER)
COMMERCIAL PLBG. LAB
140
NO WALL FINISH
EWC-2
WC-2
WC-3
WC-4
NO WALL FINISH
UR-1
UR-2
L-3
L-3
L-3
NO WALL FINISH
4" FCO
11"
16'
PRE-RINSE FAUCET AND GARBAGE DISPOSAL ON THIS COMPARTMENT
CONNECT THIS COMPARTMENT TO THE GREASE INTERCEPTOR.
SS-1
SANITIZE COMPARTMENT
GREASE INTERCEPTOR (GI-1)
ELECTRIC BOOSTER HEATER BY THE P.C.
FS-4 (BELOW)
COMMERCIAL DISHWASHER BY THE P.C.
UNISTRUT CHANNELS EMBEDDED IN THE EXISTING CONCRETE FLOOR BY THE P.C.
RESIDENTIAL PLBG. LAB
141
4" FCO
L-1
L-2
NO WALL FINISH
WH-6
FD-3
WH-5
FD-3
WH-4
WC-1
SH-1
NO WALL FINISH
BT-1
4" FCO
WH-1
WH-2
WH-3
FD-3
FD-3

1 PLUMBING ENLARGED FIRST FLOOR PLAN – EQUIPMENT LIST
1/4" = 1'-0"

ARCHITECTURE
ENGINEERING
INTERIOR DESIGN

HSR ASSOCIATES INC.
100 MILWAUKEE STREET
LA CROSSE, WISCONSIN
PHONE: 608.784.1830
FAX: 608.782.5844
WEB SITE: www.hsrassociates.com

Consultant:

galileo
CONSULTING GROUP
2920 EAST AVENUE SOUTH SUITE 102
LA CROSSE, WISCONSIN 54601
PHONE: (608) 787-9106 FAX: (608) 787-8995
E-MAIL: colson@galileo-group.us

Project Title: **WESTERN TECHNICAL COLLEGE**
APPRENTICESHIP CENTER REMODEL

Project Location: **2860 21ST PL S**
LA CROSSE, WI 54601

Sheet Title: **PLUMBING ENLARGED FIRST FLOOR PLAN**

HSR Project Number:
19021

Project Date:
FEBRUARY 4, 2020

Drawn By:
GALILEO

Key Plan:

Revisions:

No.	Description	Date

Graphic Scale:
(SEE DRAWING)

Last Update:

P201

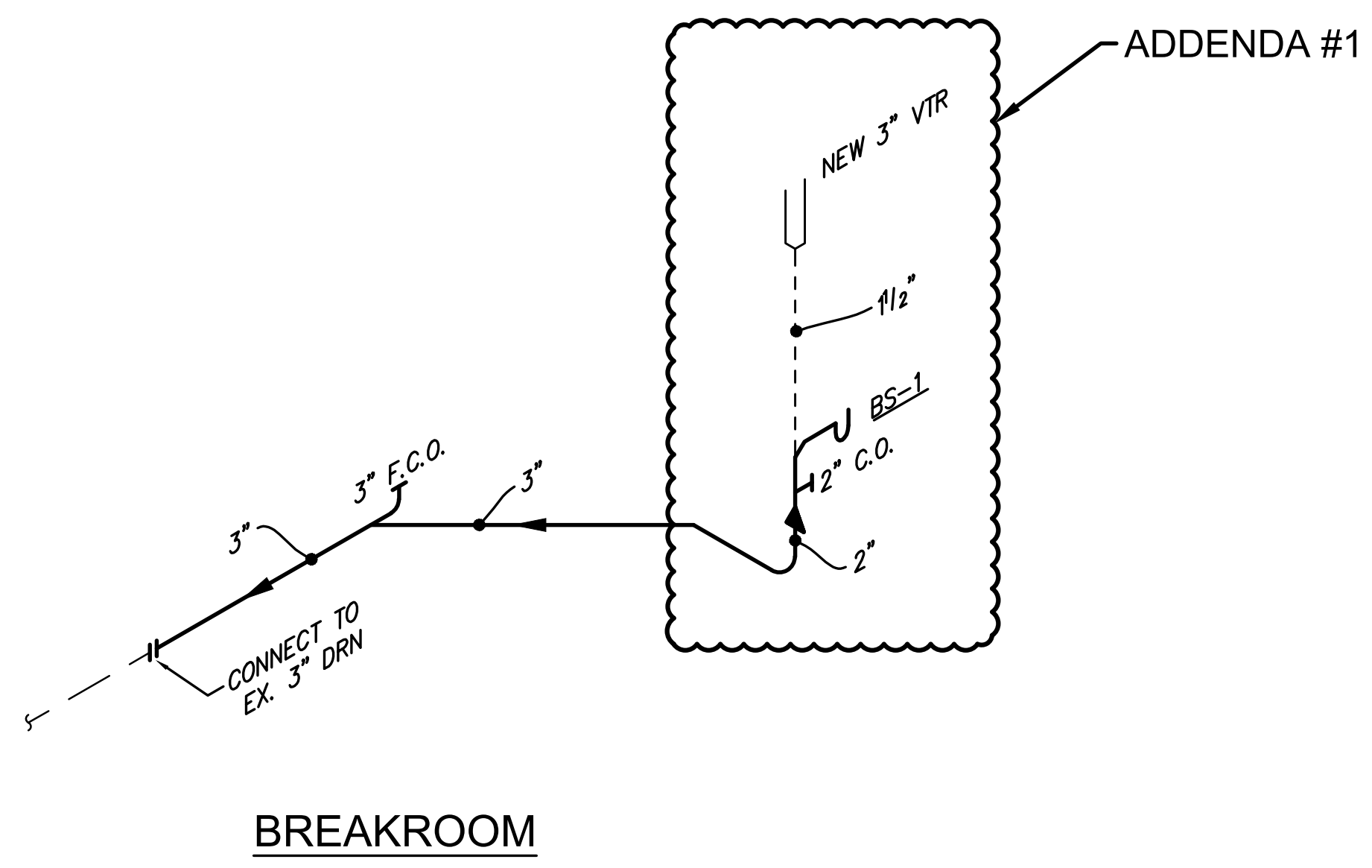
ADDENDA #1
NEW 3" VTR
1½"
BS-1
2" C.O.
2"
3"
3" F.C.O.
3"
CONNECT TO
EX. 3" DRN
BREAKROOM

1 DRAIN & VENT AT BREAK ROOM
NONE

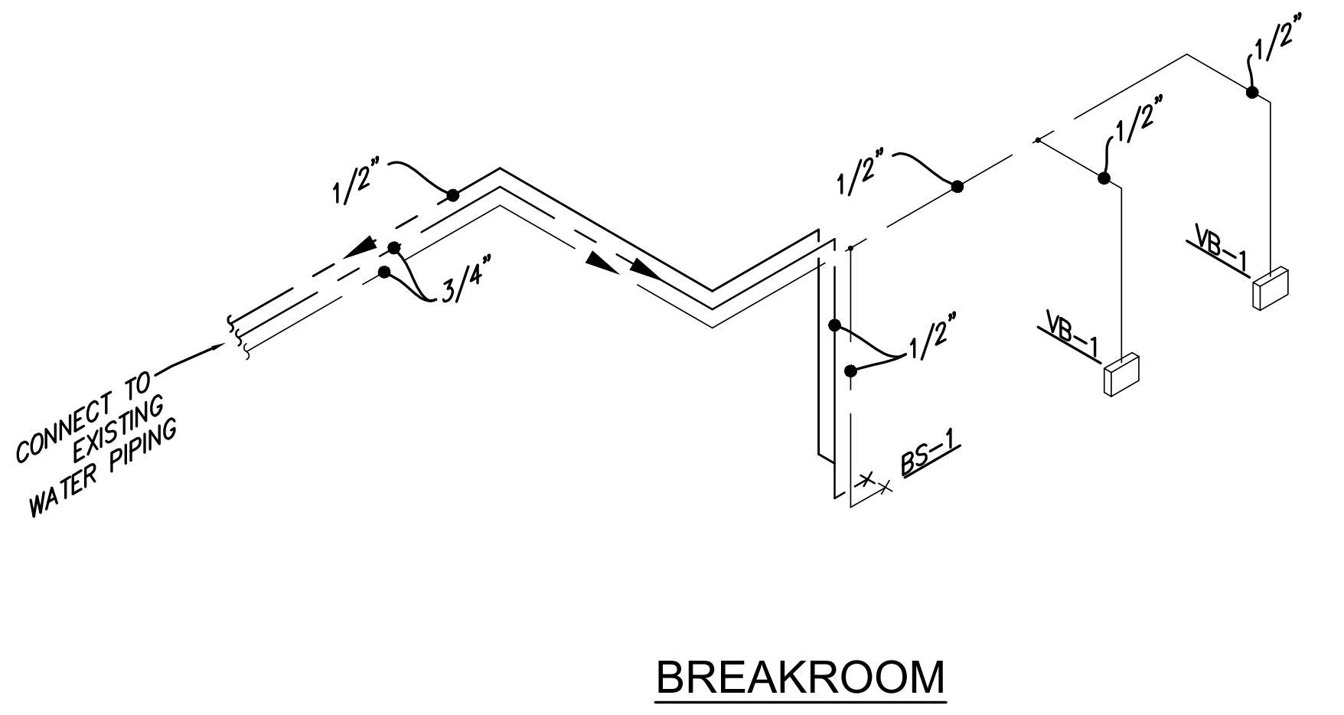
CONNECT TO
EXISTING
WATER PIPING
1/2"
3/4"
1/2"
1/2"
BS-1
1/2"
VB-1
1/2"
VB-1
BREAKROOM

2 DOMESTIC WATER AT BREAK ROOM
NONE

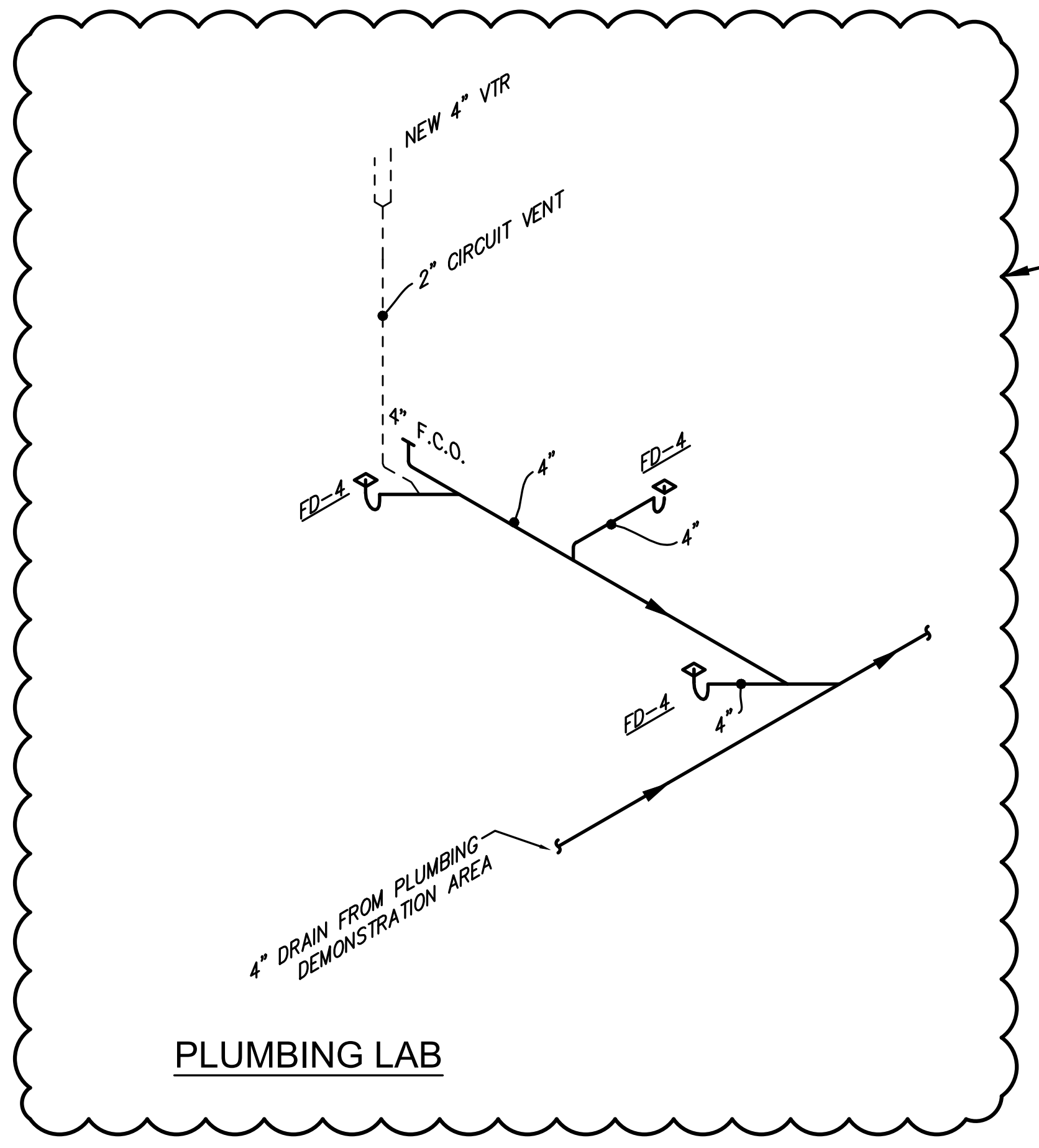
ADDENDA #2
NEW 4" VTR
2" CIRCUIT VENT
4" F.C.O.
FD-4
4"
FD-4
4"
FD-4
4"
4" DRAIN FROM PLUMBING
DEMONSTRATION AREA
PLUMBING LAB

3 DRAIN & VENT AT SOLAR DISPLAY
NONE

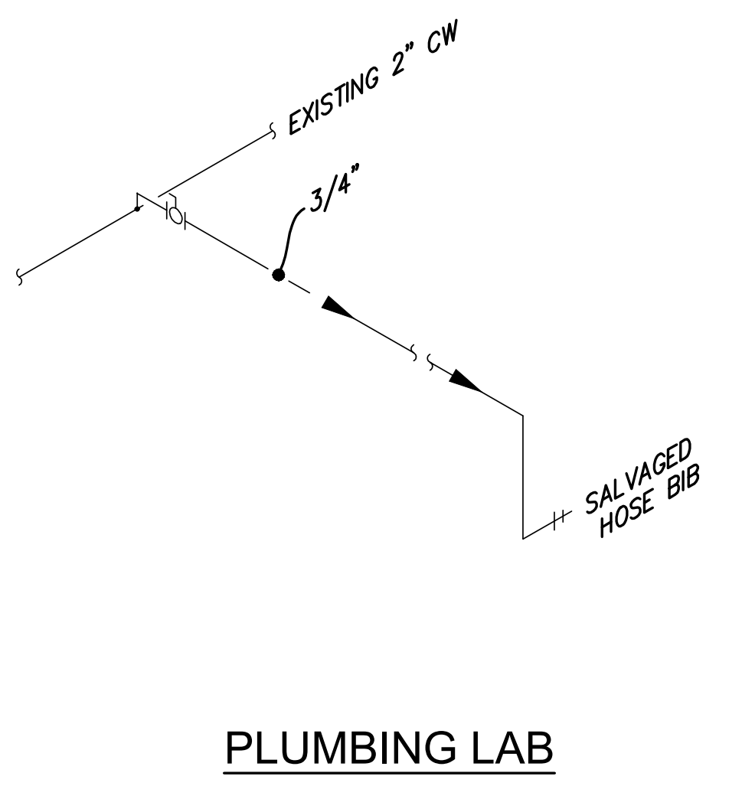
EXISTING 2" CW
3/4"
SALVAGED
HOSE BIB
PLUMBING LAB

4 DOMESTIC WATER AT SOLAR DISPLAY
NONE

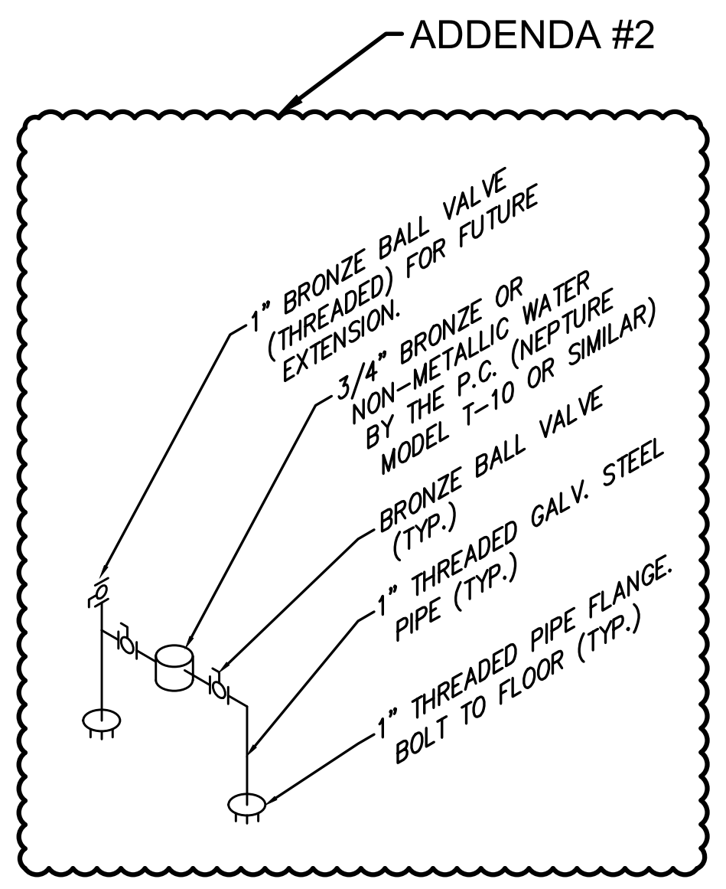
ADDENDA #2
1" BRONZE BALL VALVE
(THREADED) FOR FUTURE
EXTENSION.
3/4" BRONZE OR
NON-METALLIC WATER
BY THE P.C. (NEPTURE
MODEL T-10 OR SIMILAR)
BRONZE BALL VALVE
(TYP.)
1" THREADED GALV. STEEL
PIPE (TYP.)
1" THREADED PIPE FLANGE.
BOLT TO FLOOR (TYP.)

5 WATER METER PIPING DETAIL
NONE

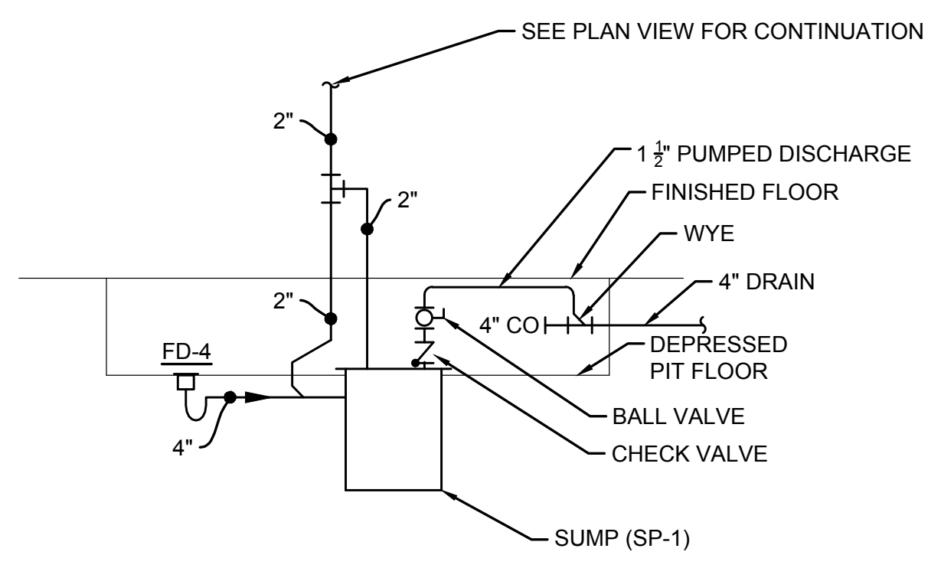
SEE PLAN VIEW FOR CONTINUATION
2"
2"
1 ½" PUMPED DISCHARGE
FINISHED FLOOR
WYE
2"
4" DRAIN
4" CO
FD-4
DEPRESSED
PIT FLOOR
BALL VALVE
CHECK VALVE
4"
SUMP (SP-1)

6 SANITARY SUMP SCHEMATIC
NONE

BACKFLOW DEVICES
① ZURN MODEL 975XL
② ZURN MODEL 350XL
③ ZURN MODEL 760
④ $500 ALLOWANCE - DEVICE TBD
⑤ $500 ALLOWANCE - DEVICE TBD
⑥ $500 ALLOWANCE - DEVICE TBD
⑦ $500 ALLOWANCE - DEVICE TBD
⑧ $500 ALLOWANCE - DEVICE TBD
⑨ $500 ALLOWANCE - DEVICE TBD

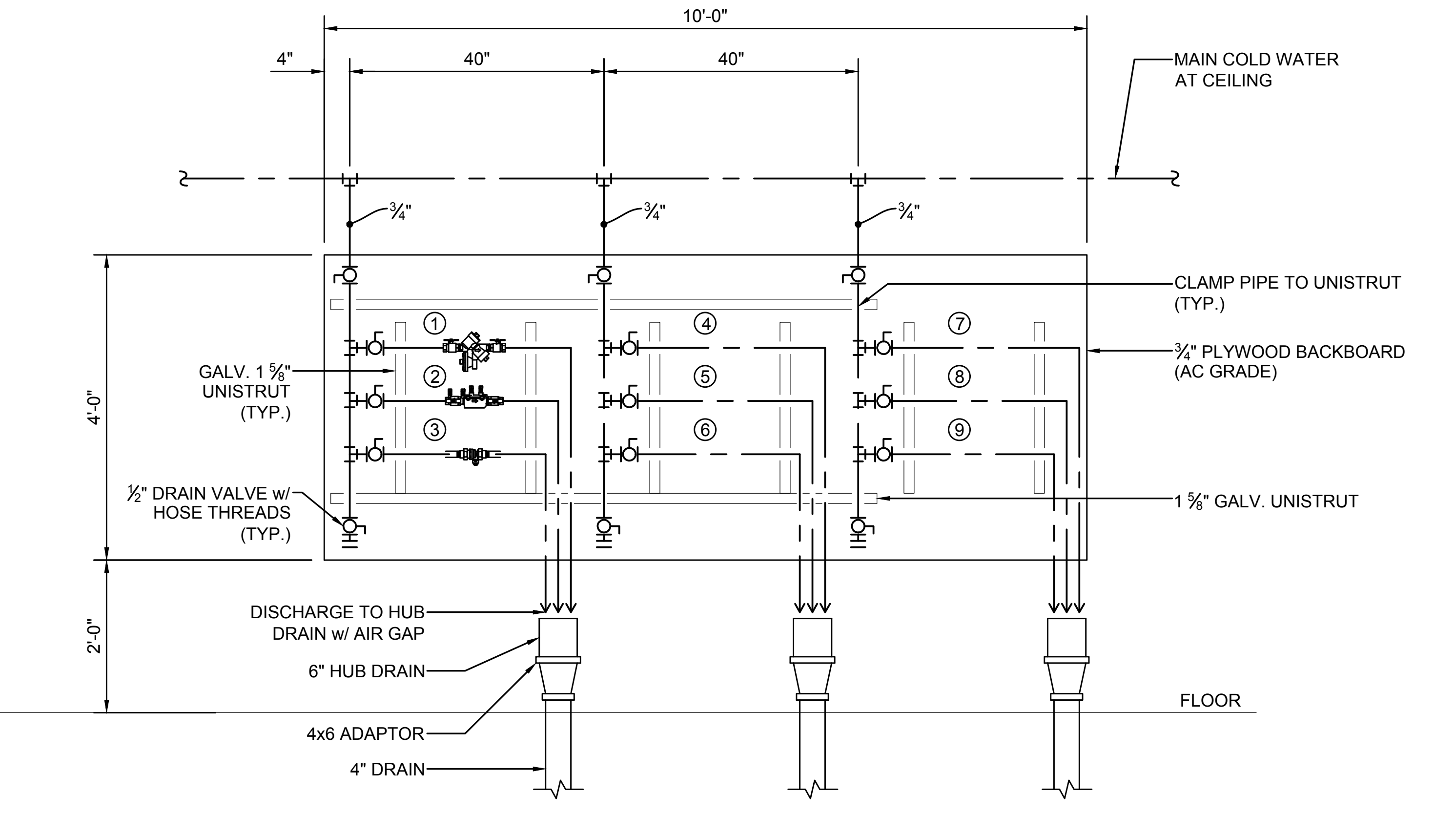
10'-0"
4"
40"
40"
MAIN COLD WATER
AT CEILING
¾"
¾"
¾"
CLAMP PIPE TO UNISTRUT
(TYP.)
①
④
⑦
GALV. 1 ⅝"
UNISTRUT
(TYP.)
②
⑤
⑧
¾" PLYWOOD BACKBOARD
(AC GRADE)
③
⑥
⑨
4'-0"
½" DRAIN VALVE w/
HOSE THREADS
(TYP.)
1 ⅝" GALV. UNISTRUT
DISCHARGE TO HUB
DRAIN w/ AIR GAP
2'-0"
6" HUB DRAIN
FLOOR
4x6 ADAPTOR
4" DRAIN

7 ELEVATION AT BACKFLOW PREVENTOR DISPLAY BOARD
NONE

ADDENDA #2

ARCHITECTURE
ENGINEERING
INTERIOR DESIGN

HSR ASSOCIATES INC.
100 MILWAUKEE STREET
LA CROSSE, WISCONSIN
PHONE: 608.784.1830
FAX: 608.782.5844
WEB SITE: www.hsrassociates.com

Consultant:

galileo CONSULTING GROUP
2920 EAST AVENUE SOUTH SUITE 102
LA CROSSE, WISCONSIN 54601
PHONE: (608) 787-9106 FAX: (608) 787-8995
E-MAIL: colson@galileo-group.us

Project Title: **WESTERN TECHNICAL COLLEGE APPRENTICESHIP CENTER REMODEL**

Project Location: **2860 21ST PL S**
LA CROSSE, WI 54601

Sheet Title: **PLUMBING ISOMETRICS, SCHEMATICS AND DETAILS**

HSR Project Number: **19021**

Project Date: **FEBRUARY 4, 2020**

Drawn By: GALILEO

Key Plan:

Revisions:

No.	Description	Date

Graphic Scale: **(SEE DRAWING)**

Last Update:

P400

ADDENDA #2

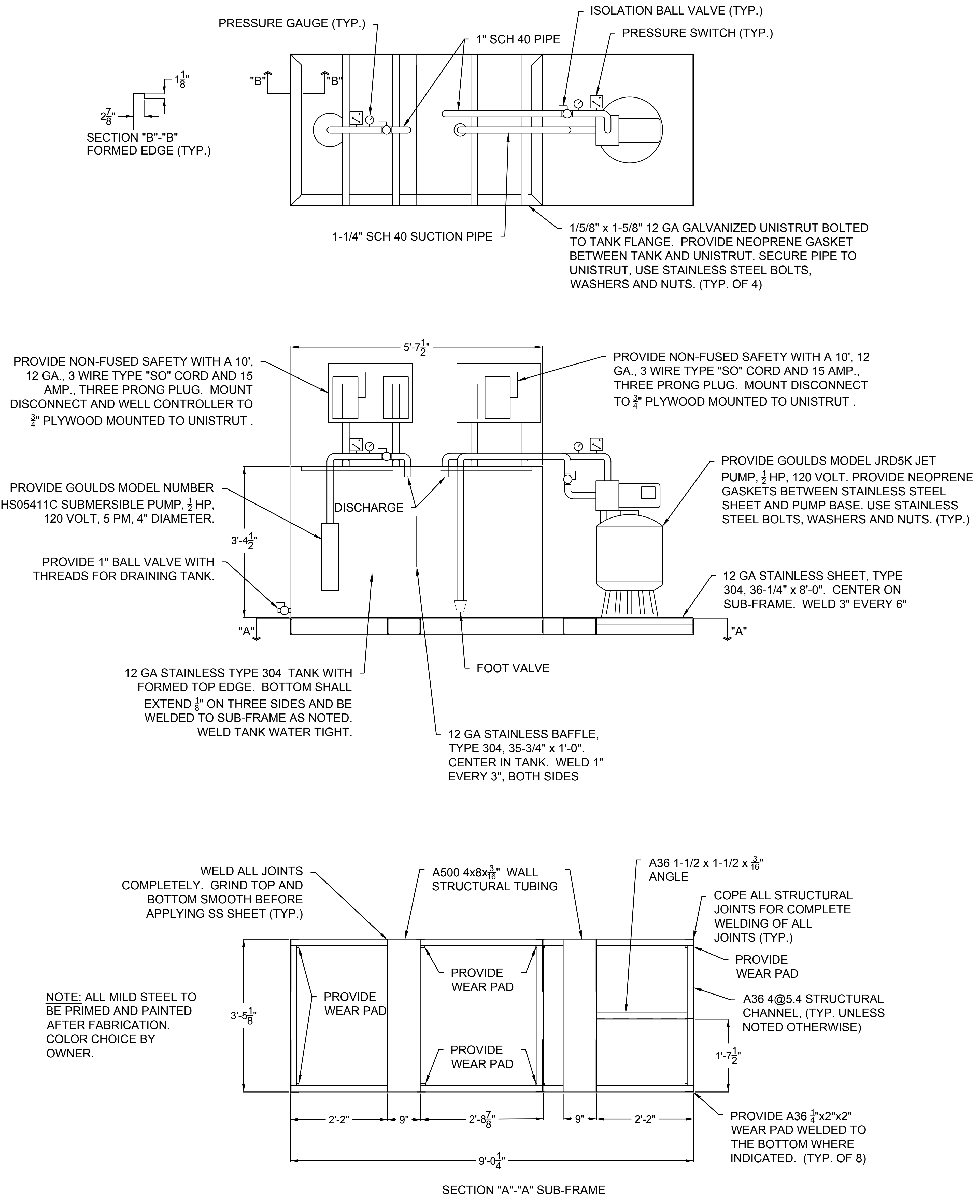
PRESSURE GAUGE (TYP.)
ISOLATION BALL VALVE (TYP.)
1" SCH 40 PIPE
PRESSURE SWITCH (TYP.)
"B"
"B"
1⅛"
2⅞"
SECTION "B"-"B"
FORMED EDGE (TYP.)
1-1/4" SCH 40 SUCTION PIPE
1/5/8" x 1-5/8" 12 GA GALVANIZED UNISTRUT BOLTED TO TANK FLANGE. PROVIDE NEOPRENE GASKET BETWEEN TANK AND UNISTRUT. SECURE PIPE TO UNISTRUT, USE STAINLESS STEEL BOLTS, WASHERS AND NUTS. (TYP. OF 4)
5'-7½"
PROVIDE NON-FUSED SAFETY WITH A 10', 12 GA., 3 WIRE TYPE "SO" CORD AND 15 AMP., THREE PRONG PLUG. MOUNT DISCONNECT AND WELL CONTROLLER TO ¾" PLYWOOD MOUNTED TO UNISTRUT .
PROVIDE NON-FUSED SAFETY WITH A 10', 12 GA., 3 WIRE TYPE "SO" CORD AND 15 AMP., THREE PRONG PLUG. MOUNT DISCONNECT TO ¾" PLYWOOD MOUNTED TO UNISTRUT .
PROVIDE GOULDS MODEL NUMBER 5HS05411C SUBMERSIBLE PUMP, ½ HP, 120 VOLT, 5 PM, 4" DIAMETER.
DISCHARGE
3'-4½"
PROVIDE 1" BALL VALVE WITH THREADS FOR DRAINING TANK.
PROVIDE GOULDS MODEL JRD5K JET PUMP, ½ HP, 120 VOLT. PROVIDE NEOPRENE GASKETS BETWEEN STAINLESS STEEL SHEET AND PUMP BASE. USE STAINLESS STEEL BOLTS, WASHERS AND NUTS. (TYP.)
12 GA STAINLESS SHEET, TYPE 304, 36-1/4" x 8'-0". CENTER ON SUB-FRAME. WELD 3" EVERY 6"
"A"
"A"
12 GA STAINLESS TYPE 304 TANK WITH FORMED TOP EDGE. BOTTOM SHALL EXTEND ⅛" ON THREE SIDES AND BE WELDED TO SUB-FRAME AS NOTED. WELD TANK WATER TIGHT.
FOOT VALVE
12 GA STAINLESS BAFFLE, TYPE 304, 35-3/4" x 1'-0". CENTER IN TANK. WELD 1" EVERY 3", BOTH SIDES
WELD ALL JOINTS COMPLETELY. GRIND TOP AND BOTTOM SMOOTH BEFORE APPLYING SS SHEET (TYP.)
A500 4x8x3/16" WALL STRUCTURAL TUBING
A36 1-1/2 x 1-1/2 x 3/16" ANGLE
COPE ALL STRUCTURAL JOINTS FOR COMPLETE WELDING OF ALL JOINTS (TYP.)
PROVIDE WEAR PAD
PROVIDE WEAR PAD
PROVIDE WEAR PAD
PROVIDE WEAR PAD
A36 4@5.4 STRUCTURAL CHANNEL, (TYP. UNLESS NOTED OTHERWISE)
3'-5⅛"
1'-7½"
2'-2"
9"
2'-8⅞"
9"
2'-2"
9'-0¼"
PROVIDE A36 ¼"x2"x2" WEAR PAD WELDED TO THE BOTTOM WHERE INDICATED. (TYP. OF 8)

NOTE: ALL MILD STEEL TO BE PRIMED AND PAINTED AFTER FABRICATION. COLOR CHOICE BY OWNER.

SECTION "A"-"A" SUB-FRAME

2 WELL PUMP DISPLAY
NONE

NOTE:

1. THE PLUMBING CONTRACTOR SHALL PROVIDE AND INSTALL AN OPERATING DOMESTIC WATER SOLAR HEATING SYSTEM.
2. FILL THE SOLAR-SIDE WITH WATER AND MAKE OPERATIONAL. THE DOMESTIC WATER SIDE WILL NOT BE CONNECTED.
3. PROVIDE AND INSTALL (1) SOLAR PANEL LOCATED ON THE ROOF OF THE INTERIOR DISPLAY IN LOCATION DIRECTED BY THE OWNER.
4. SYSTEM SHALL EMPLOY A DRAINBACK RESERVOIR.
5. RECOMMENDED SYSTEM COMPONENTS TO BE PROVIDED BY ALTERNATE ENERGY TECHNOLOGIES (AET).
6. INCLUDE ALL COMPONENTS SHOWN, INDICATED OR LISTED IN THE ADJACENT SCHEMATIC DIAGRAM..

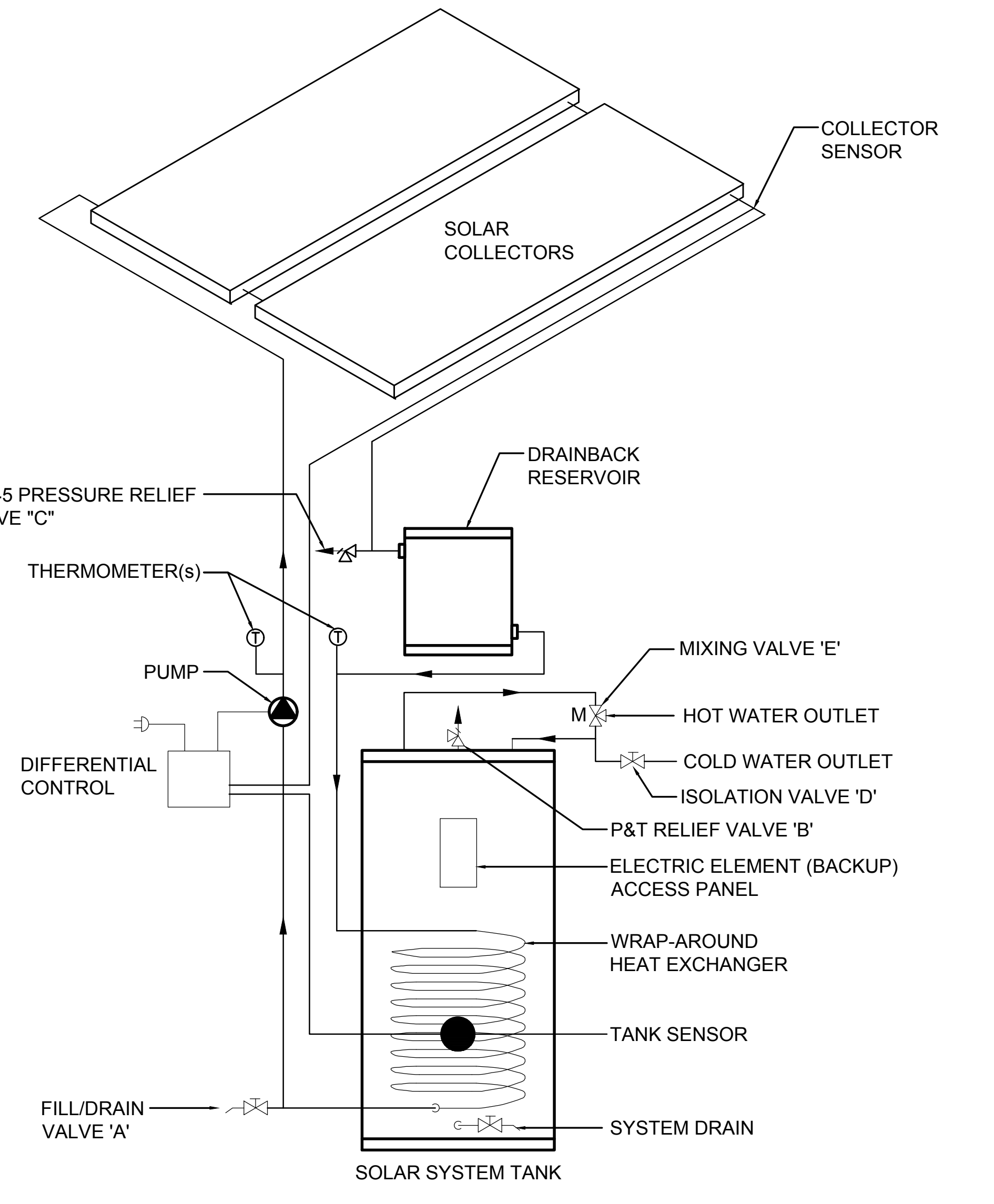
COLLECTOR SENSOR
SOLAR COLLECTORS
DRAINBACK RESERVOIR
PR-45 PRESSURE RELIEF VALVE "C"
THERMOMETER(s)
T
T
PUMP
DIFFERENTIAL CONTROL
MIXING VALVE 'E'
M
HOT WATER OUTLET
COLD WATER OUTLET
ISOLATION VALVE 'D'
P&T RELIEF VALVE 'B'
ELECTRIC ELEMENT (BACKUP) ACCESS PANEL
WRAP-AROUND HEAT EXCHANGER
TANK SENSOR
FILL/DRAIN VALVE 'A'
SYSTEM DRAIN
SOLAR SYSTEM TANK

1 SOLAR PIPING DISPLAY
NONE

ARCHITECTURE
ENGINEERING
INTERIOR DESIGN

HSR ASSOCIATES INC.
100 MILWAUKEE STREET
LA CROSSE, WISCONSIN
PHONE: 608.784.1830
FAX: 608.782.5844
WEB SITE: www.hsrassociates.com

Consultant:

galileo CONSULTING GROUP
2920 EAST AVENUE SOUTH SUITE 102
LA CROSSE, WISCONSIN 54601
PHONE: (608) 787-9106 FAX: (608) 787-8995
E-MAIL: colson@galileo-group.us

Project Title: WESTERN TECHNICAL COLLEGE
APPRENTICESHIP CENTER REMODEL

Project Location: 2860 21ST PL S
LA CROSSE, WI 54601

Sheet Title: PLUMBING DISPLAY DETAILS AND SCHEMATICS

HSR Project Number: 19021

Project Date: FEBRUARY 4, 2020

Drawn By: GALILEO

Key Plan:

Revisions:

No.	Description	Date

Graphic Scale: (SEE DRAWING)

Last Update:

P401

PLUMBING FIXTURES AND TRIM

MARK	GENERAL DESCRIPTION	FIXTURE	VALVE / FAUCET	SUPPORT	SUPPLIES	SUPPLY		WATER PIPING MATERIAL	DRAIN	DRAIN SIZE	ACCESS./ REMARKS
						CW	HW				
BS-1		**Elkay or Just Manufacturing**									
	SINGLE BOWL STAINLESS STEEL SINK (20"X20")	Self-rimming, ledge-type, single bowl stainless steel sink in 20 gauge thickness, Type 304 stainless steel, faucet drilling to match faucet.	TBD - Include $350 allowance	N/A	Heavy chrome plated supplies with flexible connections	1/2"	1/2"	Type L Copper	Stainless Steel deep cup basket stainer, chrome-plated brass tailpiece, PVC trap and related fittings.	1-1/2"	
BT-1		**Any**	**Delta or Moen**								
	RESIDENTIAL BATHTUB-SHOWER COMBINATION	Standard fiberglass tub-shower, one piece construction, white color, with full perimeter nailing flange.	Standard chrome-plated trim including pressure-balance mixing valve, tub spout, shower arm and head, and required trim	N/A	N/A	1/2"	1/2"	PEX Tubing	PVC Drain assembly with chrome-plated finished components, PVC trap and related accessories.	1-1/2"	
EWC-2	ADA-compliant	**Elkay or Haws**									
	DUAL-HEIGHT ELECTRIC WATER COOLER WITH GLASS FILLER	Standard surface-mount, dual-height electric water cooler with bottle filler on one fountain, integral refrigeration, manual controls	(None)	Provided with Water Cooler	N/A	1/2"	1/2"	PEX Tubing	PVC P-trap and related accessories.	1-1/2"	
KS-1		**Elkay or Just Manufacturing**									
	DROP-IN , TWO-COMPARTMENT STAINLESS STEEL SINK	Self-rimming, ledge-type, two-compartment stainless steel sink in 20 gauge thickness, Type 304 stainless steel, faucet drilling to match faucet plus (2) additional holes for air gap fitting and drinking water dispenser.	TBD - Include $525 allowance	N/A	Heavy chrome plated supplies with flexible connections	1/2"	1/2"	PEX Tubing	PVC trap and related accessories.	2"	
L-1		**American Standard or Kohler** (Verify)							**McGuire** # B8902		
	DROP-IN LAVATORY	Nominal 20"x18" oval bowl, drop-in, self-rimming, ledgeback with standard 4" faucet drilling.	Manual faucet TBD - Include $275 allowance	N/A	Heavy chrome plated supplies with flexible connections	1/2"	1/2"	PEX Tubing	1-1/4" chrome plated brass p-trap.	1-1/4"	
L-2		**American Standard or Kohler** (Verify)							**McGuire** # B8902		
	UNDER-COUNTER MOUNT LAVATORY	Nominal 18"x16" oval bowl, under-counter mounting, vitreous china construction, white color.	Manual faucet TBD - Include $275 allowance	N/A	Heavy chrome plated supplies with flexible connections	1/2"	1/2"	PEX Tubing	1-1/4" chrome plated brass p-trap, grid stainer with offset drain for ADA compliance.	1-1/4"	
L-3	ADA-compliant	**American Standard or Kohler** (Verify)		**Zurn** # 1231					**McGuire** # B8902		1, A, D
	WALL HUNG LAVATORY	Nominal 20"x18" wall-hung lavatory, vitreous china, integral backsplash and overflow , white color.	Electronic Faucet with hard-wired sensor and solenoid valve. Exact valve TBD - Include $550 allowance.	Floor-mounted concealed arm carrier	Heavy chrome plated supplies with flexible connections	1/2"	1/2"	Type L Copper	1-1/4" chrome plated brass p-trap, grid stainer with offset drain for ADA compliance.	1-1/4"	
LT-1		**Mustee**									
	WALL-HUNG LAUNDRY TUB	Standard single compartment laundry tub, fiberglass construction, faucet deck with standard drilling.	Manual faucet TBD - Include $175 allowance	(Optional wall-mounting kit supplied with laundry tub	Heavy chrome plated supplies with flexible connections	1/2"	1/2"	CPVC		1-1/4"	
SH-1											
	FIELD-BUILT SHOWER WITH MULTIPLE SHOWER HEADS	Provided by Others	Multiple shower components including mixing valve, diverting valve, ceiling-mounted rainfall shower head and arm, and (3) body sprays. All TBD - Include $1,500 allowance.	N/A	N/A	3/4"	3/4"	PEX Tubing	(Refer to the "DRAINS" Schedule.)	2"	
SS-1		**Elkay or Just** (Verify)							**Any** (Verify)		
	3-COMPARTMENT SCULLERY SINK, FLOOR MOUNT WITH BACKSPLASH	3-compartment scullery sink with integral backsplash, pre-rinse faucet, commercial garbage disposal, and commercial drainage fixtures. Include $2,000 allowance for equipment TBD	(Include allowance as noted under Fixture)	N/A	Heavy chrome plated supplies with flexible connections	1/2"	1/2"	Type L Copper		2"	
UR-1	ADA-compliant	**American Standard or Kohler** (Verify)									
	FLOOR-MOUNT URINAL	Floor-mount urinal, white color, 0.125 GPH flushing, washout flushing action.	Electronic Flush Valve with hard-wired sensor and solenoid valve. Exact valve TBD - Include $625 allowance.	N/A	N/A	3/4"		Type L Copper	(Refer to the "DRAINS" Schedule.)	2"	
UR-2	ADA-compliant	**American Standard or Kohler** (Verify)		**Any**							
	WALL-HUNG URINAL	Wall-hung urinal, white color, 0.125 GPH flushing, washout flushing action.	Electronic Flush Valve with hard-wired sensor and solenoid valve. Exact valve TBD - Include $625 allowance.	Floor-mount carrier with support plate to mate with urinal.	N/A	3/4"		Type L Copper	(Refer to the "DRAINS" Schedule.)	2"	
WC-1		**American Standard or Kohler** (Verify)									
	FLOOR-MOUNT, TANK-TYPE WATER CLOSET	Two-piece, floor-mounted water closet with rim height between 16.5 and 17.5 inches, white color, gravity flushing, 1.28 GPH Closed front seat with solid plastic cover and SS hinges.	Included with fixture	N/A	Heavy chrome plated supply with flexible connections	1/2"		PEX Tubing	N/A	3"	
WC-2	ADA-compliant	**American Standard or Kohler** (Verify)		**Any**							
	WALL-HUNG, FLUSH VALVE WATER CLOSET	Wall-hung, back outlet water closet, elongated bowl, white color, 1.28 GPH Open front seat without cover and self-supporting hinges.	Electronic Flush Valve with hard-wired sensor and solenoid valve. Exact valve TBD - Include $625 allowance.	300# adjustable closet carrier for back-to-back installation.	N/A	1"		Type L Copper	N/A	3"	
WC-3	ADA-compliant	**Any** (Verify)		**Any**							
	WALL-HUNG, FLUSH VALVE WATER CLOSET	Wall-hung, back outlet water closet, elongated bowl, white color, 1.28 GPH Open front seat without cover and self-supporting hinges.	Electronic Flush Valve with hard-wired sensor and solenoid valve. Exact valve TBD - Include $625 allowance.	300# adjustable closet carrier for back-to-back installation.	N/A	1"		Type L Copper	N/A	4"	
WC-4	ADA-compliant	**Any** (Verify)		**Any**							
	FLOOR-MOUNT, FLUSH VALVE WATER CLOSET	Floor-mount, back outlet water closet, elongated bowl, white color, 1.28 GPH Closed front seat with solid plastic cover and SS hinges.	Electronic Flush Valve with hard-wired sensor and solenoid valve. Exact valve TBD - Include $625 allowance.	300# adjustable closet carrier, one side one, with support foot.	N/A	1"		Type L Copper	N/A	3"	

REMARKS:
1. Handicap mounting - refer to Architectural Details

ACCESSORIES:
A. Provide McGuire "Pro-Wrap" insulated pipe coverings for water supplies and trap/drain piping.

SUMP PUMPS

PUMPS										SUMPS							PUMP CONTROLS						
MARK	PUMP TYPE	NO. OF PUMPS	MODEL No.	FLUID		STAGES	MOTOR		ACCESSORIES REMARKS	MATERIAL	MODEL No.	SIZE (INCHES)		GALLONS		REMARKS	CONTROL PANEL	MODEL No.	SIZE (INCHES)		GALLONS		REMARKS
				GPM	FT HD		HP	VOLT/PH				DIA	HEIGHT	TOTAL	Per Cycle				DIA	HEIGHT	TOTAL	Per Cycle	
SP-1	Submersible Effluent Pump	1	M-72	20	12'	1	1/3	120/1	A 1, 2, 3	Fiberglass	FB18x22	18"	22"	24	5	A	Yes	EZS-1-W-1-1-4-H	18"	22"	45	5	A, B
SP-2	Submersible Effluent Pump	2	M-72	20	12'	1	1/3	120/1	A 1, 2, 3	Fiberglass	FB18x22	18"	22"	24	5	A	Yes	EZS4-1-W-1-4-H	30"	24"	110	5	A, B

Pumps based on products by Zoeller. Equal products by Gould will be acceptable.
Sumps based on products by Topp Industries. Equal products by prior approval only.

Controls based on products by SJE Rhombus

PUMP ACCESSORIES:
1. Integral Float Switch
2. Plastic Body Check Valve
3. Plastic Body Isolation Valve

PUMP REMARKS:
A. Equip pump with cord and plug.

SUMP REMARKS:
A. Provide solid and structural cover with 1-1/2" discharge and vent opening and grommet for electrical cord.

CONTROL REMARKS:
A. Provide floats for pump down application.
B. Mount control panel in display space on main floor.

DRAINS SCHEDULE

MARK	GENERAL DESCRIPTION	FIXTURE	STRAINER FINISH	TRAP	SEDIMENT BUCKET	ACCESSORIES	REMARKS
FD-3	FLOOR DRAIN (Concrete Floors)	**Sioux Chief** #832-3PNR PVC floor drain body with threaded and adjustable strainer. Suitable for solvent weld connection to PVC piping.	PVC round strainer in standard Nickel Bronze finish.	3" PVC "P" trap (Field-fabricated)			
FD-4	FLOOR DRAIN (Concrete Floors)	**Sioux Chief** #832-4PNR PVC floor drain body with threaded and adjustable strainer. Suitable for solvent weld connection to PVC piping.	PVC round strainer in standard Nickel Bronze finish.	4" PVC "P" trap (Field-fabricated)			

ACCESSORIES:

REMARKS:

ROOF DRAINS

MARK	GENERAL DESCRIPTION	ROOF DRAIN	FINISH	INSULATION THICKNESS	OUTLET CONNECTION	ACCESSORIES	REMARKS
DN-3	DOWNSPOUT NOZZLE (3" OUTLET)	**Wade** **3943** Cast bronze downspout nozzle suitable for terminating storm water piping on a vertical exterior surface. Provide with round trim ring and matching bronze fasteners.	Standard Cast Bronze		3" threaded		
RD-3	ROOF DRAIN (3" OUTLET)	**Wade** **3003AE-NH (or TY)-DP-42-52-53** Cast iron roof drain with reversible deck flange, under-deck clamp, adjustable collar for insulation thickness from 1" to 6", perforated gravel stop, and cast iron dome strainer.	Cast Iron "Mushroom" Shape (Standard finish and color)	Varies upto 6 inches thick.	No-Hub Cast Iron or PVC	1, 3, 4	

ACCESSORIES:
1. Deck Clamp
2. Extension Flange
3. Perforated Extension
4. Perforated Gravel Stop
5. 2 Inch High Dam
6. Flow Control Assembly
7. Standpipe Assembly

REMARKS:
A.

PLUMBING MATERIAL LIST FOR PLUMBING LAB

MARK	GENERAL DESCRIPTION	MATERIALS	EQUAL PRODUCTS ALLOWED	NOTES
Residential Dishwasher	(Any)	Standard 24" dishwasher with black color face	Yes	
Commercial Dishwasher and Booster Heater	Commercial Door-style Dishwasher	Jackson "Conserver" XL HH	Yes	
	Dishwasher Booster Heater	Hatco Model C-4	Yes	Provide in 208/1 Electrical Characteristics
Grease Interceptor	Above Floor Grease Interceptor	Schier Model GB2	Yes	
IF-1	Residential Iron Filter	Hellenbrand "ProMate" 6 Iron Curtain 2.0	Yes	
LU-1	Laundry Unit Box	Guy Gray Product #82158	Yes	Box with water hammer arrestors
VB-1	Ice Maker Box	Sioux Chief #696A10B0CD	Yes	Box with water hammer arrestor
Jet Pump Package and Accessories	Tank-mounted Pump	Goulds Model JRD5X	Yes	P.C. to provide matching inlet jet for shallow well application.
Submersible Well Pump and Accessories	4" Submersible Well Pump	Goulds Order No. 5HS05	Yes	P.C. to provide matching pump control box.
	Well Pressure Tank	Welltrol Model WX-101		P.C. to provide matching pressure switch
WH-1 and CP-1	Residential Electric Water Heater	A.O. Smith Model ENT-50	Yes	
	Circulation Pump	Grundfos Model UP10-16 PM BN5/LC	Yes	
WH-2 and CP-2	Residential Natural Gas Water Heater	A.O. Smith Model GPVT 50	Yes	P.C. to pipe gas venting through roof with solid wall PVC pipe
	Circulation Pump	Grundfos Model UP10-16 PM BN5/LC	Yes	P.C. to pipe natural gas to heater and make final connections
WH-3 and CP-3	Residential Natural Gas Water Heater	A.O. Smith Model GCF-50	Yes	P.C. to pipe gas venting through roof with Type B gas vent
	Circulation Pump	Grundfos Model UP10-16 PM BN5/LC	Yes	P.C. to pipe natural gas to heater and make final connections
WH-4 and CP-4	Electric Hybrid Water Heater	A.O. Smith Model FPTU-50	Yes	
	Circulation Pump	Grundfos Model UP10-16 PM BN5/LC	Yes	
WH-5	Instantaneous Gas Water Heater	A.O. Smith Model AT-160X3P	Yes	P.C. to pipe gas venting and combustion air piping through roof with manufacturer-approved materials.
				P.C. to pipe natural gas to heater and make final connections
WH-6	Point of Use Electric Water Heater	A.O. Smith Model RPVA-30K	Yes	
Whole House Filter	Whole House Sediment Filter and Separate Carbon Filter	Pelican Model PC1000	Yes	Pipe manual bypass around entire assembly
WS-1	Residential Water Softener	Hellenbrand "Promate" 6.0	Yes	Provide with manual bypass valve

ADDENDA #2

ARCHITECTURE
ENGINEERING
INTERIOR DESIGN

HSR ASSOCIATES INC.
100 MILWAUKEE STREET
LA CROSSE, WISCONSIN
PHONE: 608.784.1830
FAX: 608.782.5844
WEB SITE: www.hsrassociates.com

Consultant:

galileo
CONSULTING GROUP
2920 EAST AVENUE SOUTH SUITE 102
LA CROSSE, WISCONSIN 54601
PHONE: (608) 787-9106 FAX: (608) 787-8995
E-MAIL: colson@galileo-group.us

Project Title: **WESTERN TECHNICAL COLLEGE APPRENTICESHIP CENTER REMODEL**

Project Location: **2860 21ST PL S**
LA CROSSE, WI 54601

Sheet Title: **PLUMBING SCHEDULES**

HSR Project Number:
19021

Project Date:
FEBRUARY 4, 2020

Drawn By:
GALILEO

Key Plan:

Revisions:

No.	Description	Date

Graphic Scale:
(SEE DRAWING)

Last Update:

P500

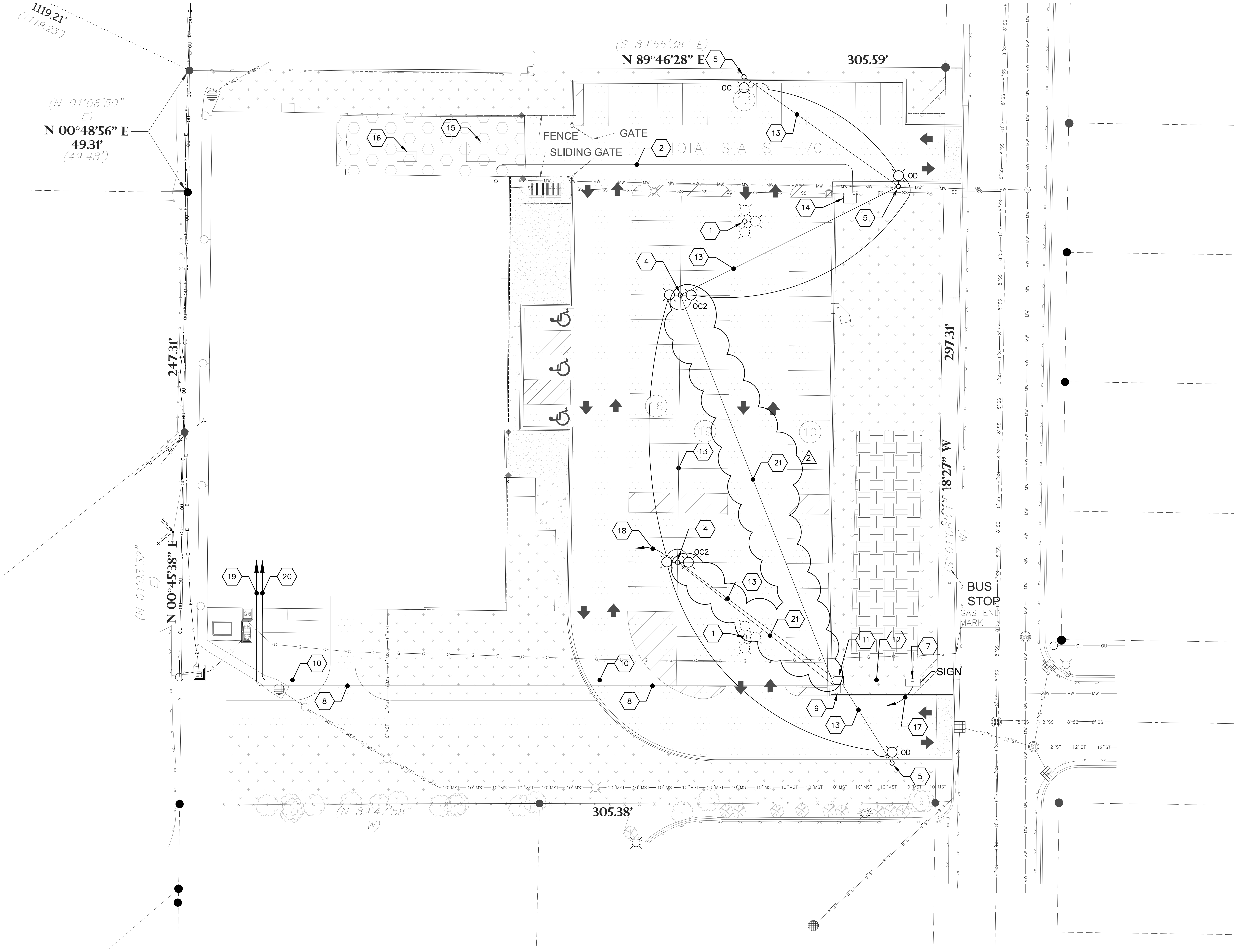
1119.21'
(1119.23')
(S 89°55'38" E)
N 89°46'28" E
305.59'
(N 01°06'50" E)
N 00°48'56" E
49.31'
(49.48')
FENCE
GATE
SLIDING GATE
TOTAL STALLS = 70
OC
OD
OC2
247.31'
297.31'
(N 01°03'32" E)
N 00°45'38" E
BUS STOP
GAS END MARK
SIGN
305.38'
(N 89°47'58" W)
1
2
4
5
7
8
9
10
11
12
13
14
15
16
17
18
19
20
21

1 E001R ELECTRICAL SITE PLAN
SCALE: 1" = 20'-0" 1907-E-SITE

LIGHTING

A b	RECESSED FLUORESCENT FIXTURE. SEE LIGHTING FIXTURE SCHEDULE. 'A' INDICATES FIXTURE TYPE. 'b' INDICATES SWITCH CONTROL
A b	SURFACE FLUORESCENT FIXTURE SEE LIGHTING FIXTURE SCHEDULE. 'A' INDICATES FIXTURE TYPE. 'b' INDICATES SWITCH CONTROL
A	WALL BRACKET LIGHTING FIXTURE SEE LIGHTING FIXTURE SCHEDULE 'A' INDICATES FIXTURE TYPE
A	SURFACE-MOUNTED FIXTURE-SEE LIGHTING FIXTURE SCHEDULE FOR DECRIPTION AND MANUFACTURER 'A' INDICATES FIXTURE TYPE
A	PENDANT-MOUNTED LIGHTING FIXTURE 'A' INDICATES FIXTURE TYPE
A	RECESS-MOUNTED DOWNLIGHT-SEE LIGHTING FIXTURE SCHEDULE FOR DECRIPTION AND MANUFACTURER 'A' INDICATES FIXTURE TYPE
A	RECESSED WALL-WASH OR SPOTLIGHTING FIXTURE, DIRECTION AS INDICATED BY ARROW 'A' INDICATES FIXTURE TYPE
A	WALL MOUNTED FIXTURE-SEE FIXTURE SCHEDULE 'A' INDICATES FIXTURE TYPE
	POLE MOUNTED LIGHT FIXTURE
A	FLUORESCENT STRIP FIXTURE 'A' INDICATES FIXTURE TYPE
TL	TRACK LIGHTING FIXTURE WITH NUMBER OF FIXTURES INDICATED.
A	LIGHTING FIXTURES ON EMERGENCY POWER SOURCE 'A' INDICATES FIXTURE TYPE. 'NL' INDICATES IF FIXTURE IS TO BE ON AT ALL TIMES
ELU	EMERGENCY LIGHTING UNIT WITH SELF-CONTAINED BATTERY AND HEADS AS INDICATED WG = WIRE GUARD PROTECTED
CELU	CEILING MOUNTED EMERGENCY LIGHTING UNIT WITH SELF-CONTAINED BATTERY AND HEADS AS INDICATED WG = WIRE GUARD PROTECTED
ZR	EMERGENCY LIGHTING UNIT REMOTE HEAD
X1	EXIT LIGHT FIXTURE, NUMBER OF FACES AND DIRECTIONAL ARROWS AS INDICATED WG = WIRE GUARD PROTECTED
XE	COMBINATION EXIT LIGHT AND EMERGENCY LIGHTING UNIT
CF	CEILING FAN

RACEWAY

	NEUTRAL CONDUCTOR (TYP.)
	POWER CONDUCTOR (TYP.)
	BRANCH CIRCUIT CARRYING SWITCHED CONDUCTORS
	BRANCH CIRCUIT WITHOUT SWITCHED CONDUCTORS
	LOW VOLTAGE CIRCUIT
	GROUND OR NEUTRAL CONNECTION AS INDICATED
J	JUNCTION BOX
	UNDERFLOOR DUCT AND JUNCTION BOX
	EMPTY OUTLET BOX WITH BLANK COVER PLATE, SIZE AND TYPE AS INDICATED
L2, LCP-1, R1	HOME RUN TO PANEL 'L' CIRCUIT #2 VIA RELAY #1 IN LIGHTING CONTROL PANEL LCP-1. SEE PANELBOARD & LIGHTING CONTROL RELAY SCHEDULES
L2	HOME RUN DIRECTLY TO PANEL 'L' CIRCUIT #2
	CONDUIT ROUTED ABOVE GROUND SIZE AND TYPE AS INDICATED
	CONDUIT ROUTED BELOW GROUND OR FLOOR SLAB SIZE AND TYPE AS INDICATED
	CONDUIT TURNED UP
	CONDUIT TURNED DOWN
CT	CABLE TRAY
BD ###A	BUS DUCT ### INDICATES AMPACITY
	CONDUIT SEAL-OFF

NOTE: ALL BRANCH CIRCUITS TO CARRY SEPARATE GROUNDING CONDUCTOR REGARDLESS OF CONDUIT MATERIAL

RECEPTACLES

	DUPLEX RECEPTACLE WITH 3 WIRE GROUNDING
XX	SPECIAL PURPOSE DUPLEX RECEPTACLE LETTERS INDICATE FUNCTION – CIRCUIT RECEPT. AS INDICATED

AC = ABOVE COUNTER MOUNTING HEIGHT
D = DEDICATED USE RECEPTACLE
GFCI = RECEPTACLE WITH GROUND FAULT INTERRUPTION (GFI) PROTECTION
IG = ISOLATED GROUND
TVSS = TRANSIENT VOLTAGE SURGE SUPPRESSING
X = EXISTING OUTLET BOX W/ NEW RECEPT.
WP = WEATHERPROOF

	FOUR-PLEX (DOUBLE DUPLEX) RECEPTACLE
	SINGLE RECEPTACLE
	THREE-WIRE RECEPTACLE
	HALF-SWITCHED RECEPTACLE
	FLOOR MOUNTED RECEPTACLE
	FLOOR MOUNTED DUPLEX RECEPTACLE W/ SPACE FOR DATA RECEPTACLES
	SPECIAL PURPOSE OUTLET, TYPE AS INDICATED
	SURFACE-MOUNTED "PLUG MOLD"; TYPE, MOUNTING HEIGHT & RECEPT. LOCATIONS AS INDICATED
PP	POWER POLE
	CORD AND PLUG POWER CONNECTION

SWITCHES

$X	WALL SWITCH, SINGLE POLE SINGLE THROW (SPST) LETTER INDICATES SPECIAL FEATURE

3 = 3-WAY SWITCH
4 = 4-WAY SWITCH
D = DIMMER
DPST = DOUBLE POLE SINGLE THROW
F = FUSED
H/C = HEAT/COOL
K = KEY
M = MANUAL MOTOR STARTER
MC = MOMENTARY CONTACT SWITCH
OS = OCCUPANCY SENSING
P = PILOT LIGHT
SM = SURFACE-MOUNTED
T = TIMER SWITCH, MFG & MODEL # AS INDICATED
TP = MANUAL MOTOR SWITCH, SINGLE PHASE WITH OVERLOADS AND PILOT LIGHT
V = VOLUME CONTROLS
VS = 120 VOLT, 20 AMP MOTOR RATED VARIABLE SPEED SWITCH
WP = WEATHER PROOF
X = EXISTING OUTLET BOX WITH NEW SWITCH

NOTE: LOWER CASE LETTERS INDICATE MULTIPLE LEVELS OF LIGHT CONTROL OF FIXTURES WITH CORRESPONDING LETTERS INDICATED ON FIXTURES

#	WALL SWITCH FOR LIGHTING CONTROL SYSTEM # INDICATES UNIQUE SWITCH DESIGNATION AS SCHEDULED
OS	CEILING MOUNTED OCCUPANCY SENSOR
PP	OCCUPANCY SENSOR POWER PACK

DISTRIBUTION EQUIPMENT

	POWER DISTRIBUTION PANEL.
	BRANCH CIRCUIT PANELBOARD
	ELECTRICAL METER SOCKET
T	TRANSFORMER. SIZE AS INDICATED
	DISCONNECT SWITCH, NON-FUSED
	DISCONNECT SWITCH, FUSED
MCC	MOTOR CONTROL CENTER
	POWER/LIGHTING CONTACTOR

MOTORS AND EQUIPMENT

	MAGNETIC MOTOR STARTER
	COMBINATION DISCONNECT SWITCH AND STARTER
	MANUAL MOTOR SWITCH, 3-PHASE WITH OVERLOADS AND PILOT LIGHT
	MOTOR SEE POWER AND EQUIPMENT SCHEDULE.
	EQUIPMENT CONNECTION POINT. SEE POWER AND EQUIPMENT SCHEDULE.

CONTROL DEVICES

CP	CONTROL PANEL
TCP	TEMPERATURE CONTROL PANEL
TC	TIME CLOCK
P	PHOTOCELL
T	THERMOSTAT
R	RELAY
	DOOR BELL
	BUZZER
	PUSH BUTTON REMOTE CONTROL STATION

FIRE ALARM SYSTEM

NOTES:
MOUNTING HEIGHTS FOR FIRE ALARM DEVICES:
MANUAL PULL STATION = 48"
HORN/STROBE = 80"
STROBE LIGHTS = 80"
MAGNETIC DOOR HOLDERS = AS SPECIFIED

FACP	FIRE ALARM CONTROL PANEL(FACP)
FAAN	FIRE ALARM ANNUNCIATOR
F	MANUAL PULL STATION
S	DUCT SMOKE DETECTOR
S	SMOKE DETECTOR
S	SMOKE DETECTOR WITH AUXILIARY CONTACTS
H	HEAT DETECTOR
H	HEAT DETECTOR WITH AUXILIARY CONTACTS
CO	CARBON MONOXIDE DETECTOR
H X	WEATHER PROOF FIRE HORN/STROBE X = EXTERIOR
H	F.A. HORN
H	F.A. AUDIO / VISUAL (HORN/STROBE) WG = WIRE GUARD PROTECTED
ELR	END OF LINE RESISTER
SL	STROBE LIGHT
G	GAS DETECTOR
M	MAGNETIC DOOR HOLDER
FS	SPRINKLER SYSTEM WATER FLOW SWITCH
TS	SPRINKLER SYSTEM TAMPER SWITCH
RA	RESCUE ASSISTANCE CALL STATION
RAAN	RESCUE ASSISTANCE ANNUNCIATOR

DATA AND COMMUNICATION EQUIPMENT

TTB 4'x8'	DATA/COMMUNICATION BOARD (TTB) 3/4" THICK, GRADE AC PLYWOOD. HEIGHT AND WIDTH AS INDICATED.
2	TELECOMMUNICATIONS OUTLET NUMBER INDICATES 1-DATA JACK, 1-PHONE JACK
X	FLOOR MOUNTED TELECOMMUNICATIONS OUTLET LETTER OR NUMBER INDICATES FUNCTION
	FLOOR MOUNTED DUPLEX RECEPTACLE W/ SPACE FOR DATA RECEPTACLES
TTC	TELEPHONE TERMINAL CABINET
TVTB 4'x8'	CABLE TELEVISION TERMINAL BOARD (TVTB) – 3/4" THICK, GRADE AC PLYWOOD. HEIGHT AND WIDTH AS INDICATED.
TVTC	CABLE TELEVISION TERMINAL CABINET (TVTC)
	TELEVISION OUTLET
	CLOCK OUTLET DF = DOUBLE FACE

SOUND SYSTEM

S	SPEAKER ONLY (WALL-MOUNTED)
S	SPEAKER ONLY (CEILING-MOUNTED)
LS	LOUD SPEAKER
M	MICROPHONE JACK
M	FLOOR-MOUNTED MICROPHONE JACK
$V	VOLUME CONTROLS
SSC	SOUND SYSTEM CONSOLE
SCP	SOUND SYSTEM CONTROL PANEL WITH AMPLIFIER

MISCELLANEOUS

	EQUIPMENT CONNECTION POINT: SEE MOTOR & EQUIPMENT SCHEDULE
NC	NURSE CALL
NC ES PS	NURSE CALL – EMERGENCY STATION/PULL STRING
DL DT	NURSE CALL DOME LIGHT DT = DUTY TONE STATION
♿	HANDICAPPED ACCESSIBLE DOOR OPERATOR CONTROL BUTTON
RS	ROOM STATUS SYSTEM INDICATOR

SECURITY EQUIPMENT

CR	CARD READER
CM	CAMERA C# = NEW CAMERA ECM = EXISTING CAMERA
	MONITOR
KP	SECURITY SYSTEM KEY PAD
IR	SECURITY SYSTEM INFRARED MOTION SENSOR
HB	SECURITY SYSTEM HAND BUTTON ACTIVATION SWITCH
SP	SECURITY SYSTEM SAFE PROTECTION CONNECTION
MC	SECURITY SYSTEM MONEY CLIP ACTIVATION SWITCH
PS	PHOTOELECTRIC PROXIMITY SENSOR
DC	MAGNETIC DOOR CONTACT SWITCH
RQ	REQUEST TO EXIT
	ELECTRIC STRIKE
BG	BREAK GLASS SENSOR

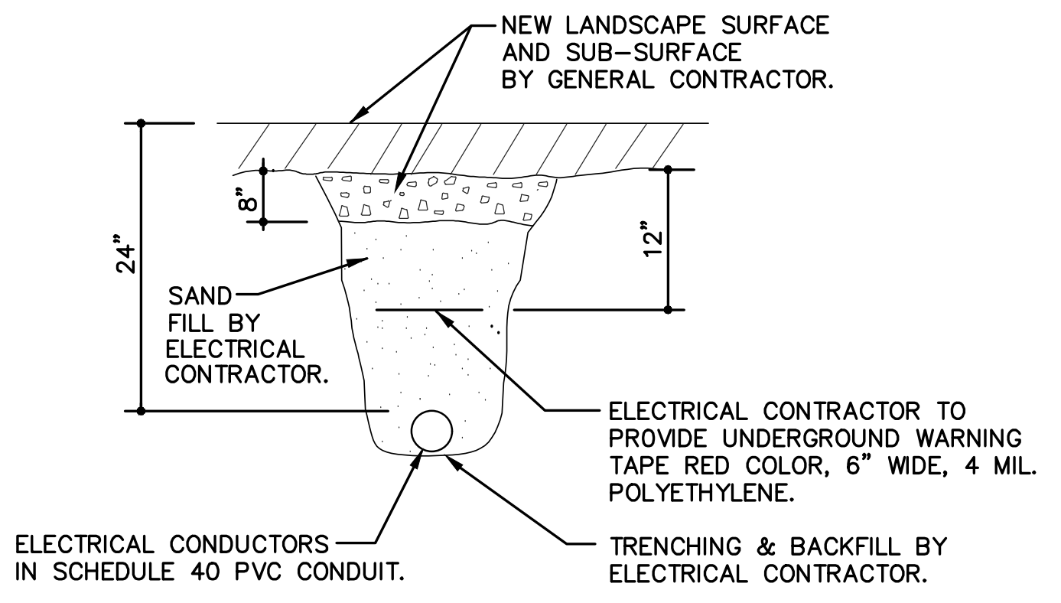
NEW LANDSCAPE SURFACE AND SUB-SURFACE BY GENERAL CONTRACTOR.
24"
8"
12"
SAND FILL BY ELECTRICAL CONTRACTOR.
ELECTRICAL CONTRACTOR TO PROVIDE UNDERGROUND WARNING TAPE RED COLOR, 6" WIDE, 4 MIL. POLYETHYLENE.
ELECTRICAL CONDUCTORS IN SCHEDULE 40 PVC CONDUIT.
TRENCHING & BACKFILL BY ELECTRICAL CONTRACTOR.

4 E001R TRENCH DETAIL
NTS 1907-E-TRENCH-DTL

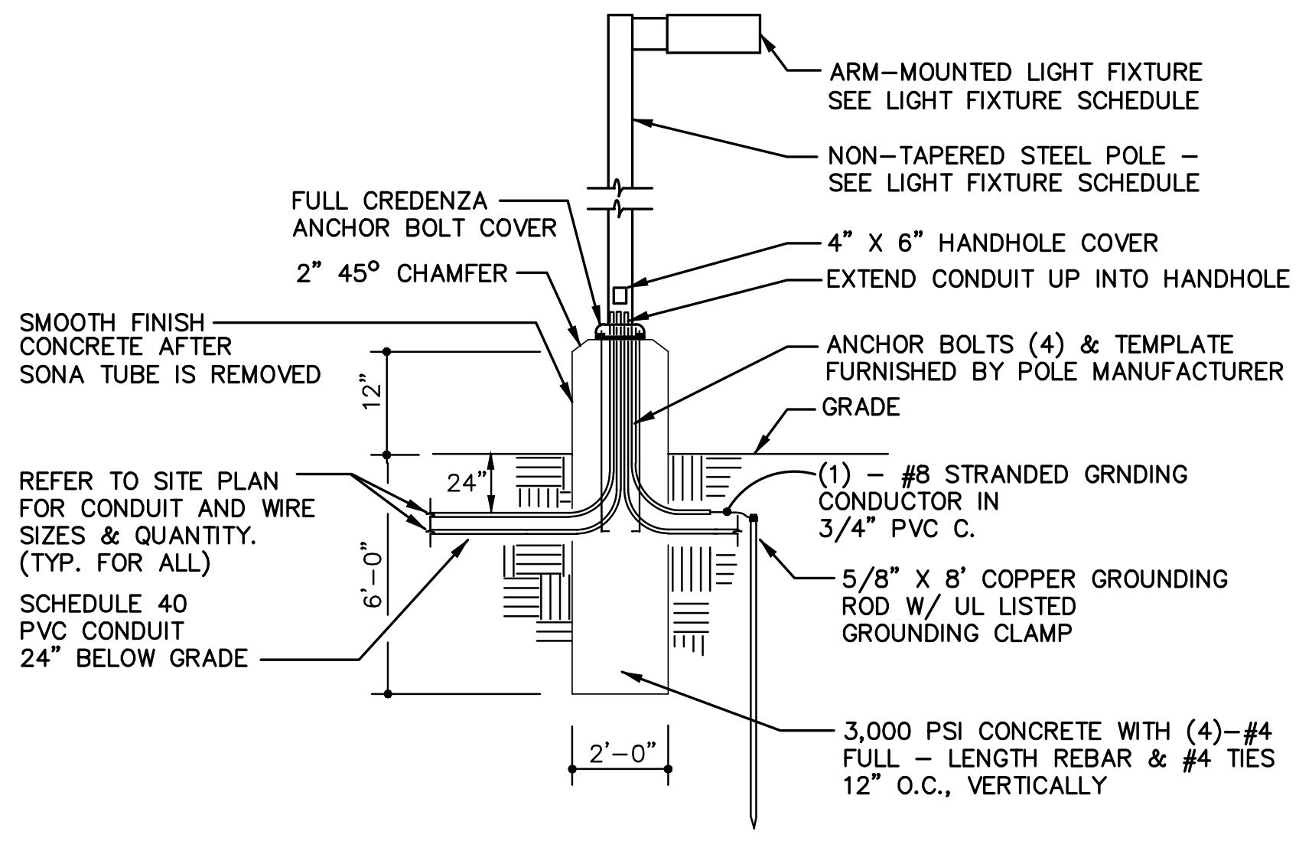
ARM-MOUNTED LIGHT FIXTURE SEE LIGHT FIXTURE SCHEDULE
NON-TAPERED STEEL POLE – SEE LIGHT FIXTURE SCHEDULE
FULL CREDENZA ANCHOR BOLT COVER
2" 45° CHAMFER
4" X 6" HANDHOLE COVER
EXTEND CONDUIT UP INTO HANDHOLE
SMOOTH FINISH CONCRETE AFTER SONA TUBE IS REMOVED
ANCHOR BOLTS (4) & TEMPLATE FURNISHED BY POLE MANUFACTURER
GRADE
12"
24"
6'-0"
REFER TO SITE PLAN FOR CONDUIT AND WIRE SIZES & QUANTITY. (TYP. FOR ALL)
(1) – #8 STRANDED GRNDING CONDUCTOR IN 3/4" PVC C.
SCHEDULE 40 PVC CONDUIT 24" BELOW GRADE
5/8" X 8' COPPER GROUNDING ROD W/ UL LISTED GROUNDING CLAMP
3,000 PSI CONCRETE WITH (4)-#4 FULL – LENGTH REBAR & #4 TIES 12" O.C., VERTICALLY
2'-0"

3 E001R TYPE 'OC' & 'OD' POLE LIGHT DETAIL
NTS 1907-E-POLE LIGHT DTL

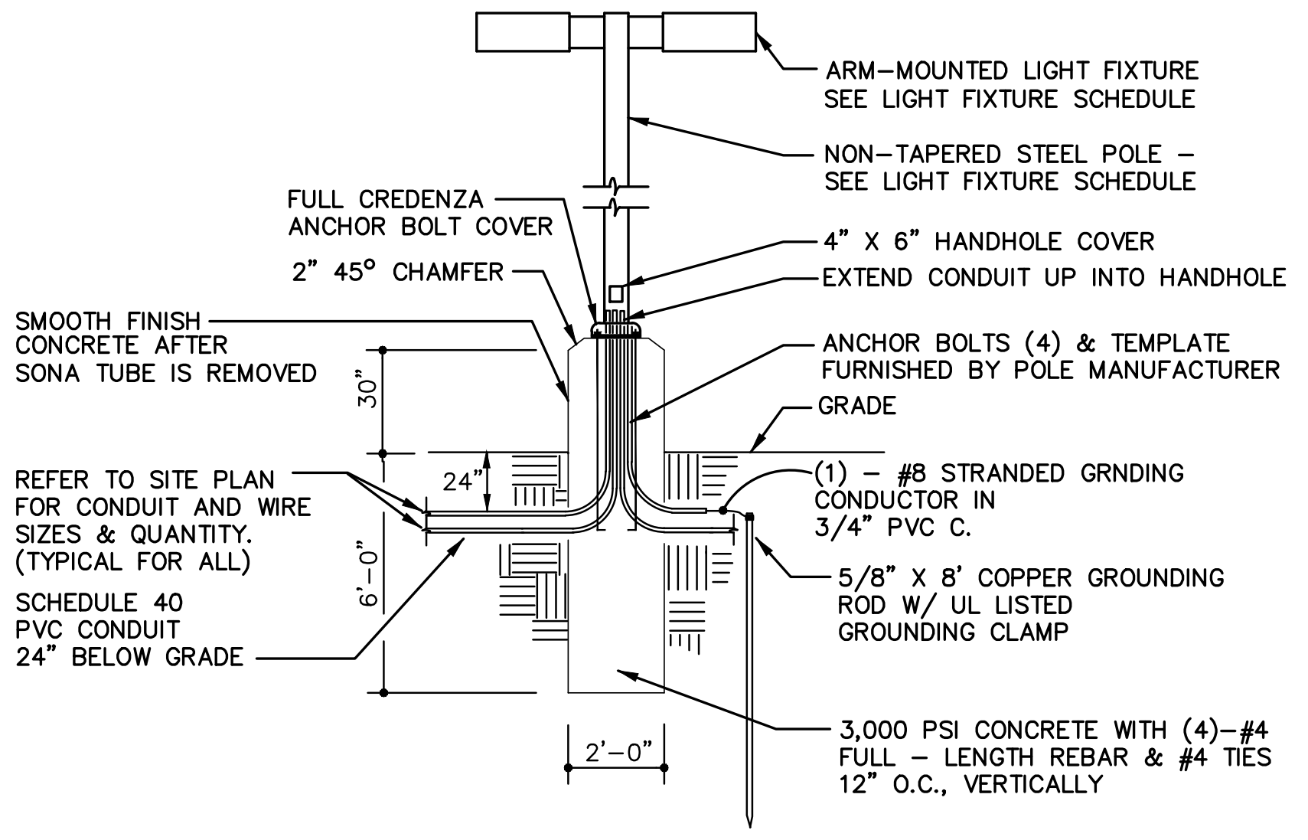
ARM-MOUNTED LIGHT FIXTURE SEE LIGHT FIXTURE SCHEDULE
NON-TAPERED STEEL POLE – SEE LIGHT FIXTURE SCHEDULE
FULL CREDENZA ANCHOR BOLT COVER
2" 45° CHAMFER
4" X 6" HANDHOLE COVER
EXTEND CONDUIT UP INTO HANDHOLE
SMOOTH FINISH CONCRETE AFTER SONA TUBE IS REMOVED
ANCHOR BOLTS (4) & TEMPLATE FURNISHED BY POLE MANUFACTURER
GRADE
30"
24"
6'-0"
REFER TO SITE PLAN FOR CONDUIT AND WIRE SIZES & QUANTITY. (TYPICAL FOR ALL)
(1) – #8 STRANDED GRNDING CONDUCTOR IN 3/4" PVC C.
SCHEDULE 40 PVC CONDUIT 24" BELOW GRADE
5/8" X 8' COPPER GROUNDING ROD W/ UL LISTED GROUNDING CLAMP
3,000 PSI CONCRETE WITH (4)-#4 FULL – LENGTH REBAR & #4 TIES 12" O.C., VERTICALLY
2'-0"

2 E001R TYPE 'OC2' POLE LIGHT DETAIL
NTS 1907-E-POLE LIGHT DTL

PHOTO #1
1718

KEYED SITE PLAN NOTES E001:

1. DISCONNECT, REMOVE AND DISPOSE OF EXISTING 'COBRA HEAD' TYPE POLE MOUNTED LIGHTING FIXTURE. REMOVE ASSOCIATED CONCRETE BASE, CONDUIT, WIRE, ETC. REFER TO PHOTO **#1/E001**.
2. PROVIDE AN EMPTY 2" SCHEDULE 40 PVC CONDUIT FOR 'FUTURE' SOLAR SYSTEM WIRING. COORDINATE WITH WTC ELECTRICAL APPRENTICESHIP PROGRAM DEPARTMENT.
3. PROVIDE 2-#10 XHHW AND 1-#10 XHHW (GRD) IN 1" SCHEDULE 40 PVC CONDUIT TO FEED EXISTING RELOCATED ILLUMINATED SIGN.
4. PROVIDE AND INSTALL NEW POLE MOUNTED LIGHT FIXTURE TYPE 'OC2' AND NEW CONCRETE BASE. REFER TO BASE DETAIL **2/E001.** REFER TO LIGHTING FIXTURE SCHEDULE.
5. PROVIDE AND INSTALL NEW POLE MOUNTED LIGHT FIXTURE TYPE 'OC' OR 'OD' AND NEW CONCRETE BASE. REFER TO BASE DETAIL **3/E001.** REFER TO LIGHTING FIXTURE SCHEDULE.
6. PROVIDE 2-#10 XHHW AND 1-#10 XHHW (GRD) IN 1" SCHEDULE 40 PVC CONDUIT TO FEED NEW POLE MOUNTED LIGHT FIXTURE.
7. MAKE FINAL CONNECTION TO 120VAC LED BACKLIT MONUMENT SIGN. PROVIDE A 30 AMP., SINGLE-POLE, WEATHER-PROOF, LOCKABLE DISCONNECT SWITCH. COORDINATE WITH SIGN COMPANY AND WTC FACILITY DEPARTMENT.
8. PROVIDE AN EMPTY 2" SCHEDULE 40 PVC CONDUIT FOR 'FUTURE' LOW VOLTAGE WIRING. COORDINATE WITH WTC IT DEPARTMENT.
9. PROVIDE AN 11"(W) X 18" (L) X 18" (D) QUAZITE JUNCTION BOX WITH OPEN BOTTOM. QUAZITE BOX MODEL #PG1118BA18, QUAZITE COVER MODEL #PG1118HH00, PLEASE INCLUDE LOGO COVER AS FOLLOWS: "LOW VOLTAGE", OR EQUAL.
10. PROVIDE A 2" SCHEDULE 40 PVC CONDUIT WITH 2-#10 XXHW-2 & 1-#10 XHHW-2 (GRD) FOR POLE LIGHTING FIXTURE WIRING. ALSO PROVIDE 2-#10 XHHW FOR MONUMENT SIGN WIRING. PROVIDE A PULL STRING
11. PROVIDE AN 11"(W) X 18" (L) X 18" (D) QUAZITE JUNCTION BOX WITH OPEN BOTTOM. QUAZITE BOX MODEL #PG1118BA18, QUAZITE COVER MODEL #PG1118HH00, PLEASE INCLUDE LOGO COVER AS FOLLOWS: "ELECTRIC", OR EQUAL.
12. PROVIDE A ¾" SCHEDULE 40 PVC CONDUIT WITH 2-#10 XHHW-2, AND 1-#10 XHHW-2 (GRD) FOR 120 VAC, MONUMENT SIGN WIRING.
13. PROVIDE A ¾" SCHEDULE 40 PVC CONDUIT WITH 2-#10 XHHW-2, AND 1-#10 XHHW-2 (GRD) FOR 208 VAC POLE LIGHTING FIXTURE WIRING.
14. PROVIDE AN 11"(W) X 18" (L) X 18" (D) QUAZITE JUNCTION BOX WITH OPEN BOTTOM. QUAZITE BOX MODEL #PG1118BA18, QUAZITE COVER MODEL #PG1118HH00, PLEASE INCLUDE LOGO COVER AS FOLLOWS: "SOLAR", OR EQUAL.
15. APPROXIMATE LOCATION OF ELECTRIC SERVICE CONCRETE PAD FOR ELECTRICAL APPRENTICESHIP COMMERCIAL LABS. COORDINATE WITH ELECTRICAL APPRENCTICESHIP INSTRUCTOR.
16. APPROXIMATE LOCATION OF 'FUTURE' EMERGENCY GENERATOR CONCRETE PAD FOR ELECTRICAL APPRENTICESHIP COMMERCIAL LABS. COORDINATE WITH ELECTRICAL APPRENCTICESHIP INSTRUCTOR.
17. IF MONUMENT SIGN IS 120VAC, CONNECT TO PANELBOARD LA1 LOCATED IN ELECTRICAL ROOM #109. IF MONUMENT SIGN IS 277 VAC, CONNECT TO PANELBOARD 'HA' OR TO A RELAY IN EXISTING LIGHTING CONTROL PANEL LOCATED ADJACENT TO PANELBOARD 'HA' IN ELECTRICAL ROOM #109.
18. CONNECT 277 VAC, EXTERIOR POLE LIGHTS TO EXISTING LIGHTING CONTROL PANEL LOCATED ADJACENT TO PANELBORD 'HA'. LIGHTING FIXTURES SHALL ILLUMINATE FROM DUSK TO DAWN.
19. EXTEND 2" SCHEDULE 40 CONDUIT FOR LOW VOLTAGE WIRING TO IT EQUIPMENT RACK LOCATED IN ELECTRICAL ROOM #109.
20. EXTEND CONDUIT FOR SITE LIGHTING AND POWER INTO ELECTRICAL ROOM #109, PROVIDE A 12"X12"X6" JUNCTION BOX INSIDE ELECTRICAL ROOM. FROM THIS JUNCTION BOX INSTALL A 1" EMT CONDUIT TO EXISTING LIGHTING CONTROL PANEL AND PANELBOARD 'HA'. IN ADDITION PROVIDE A 1" EMT CONDUIT FROM JUNCTION BOX TO PANELBOARD 'LA1'.
21. PROVIDE AN EMPTY ¾" SCHEDULE 40 PVC CONDUIT BETWEEN LOW VOLTAGE IN-GROUND JUNCTION BOX AND POLE LIGHT FIXTURE FOR 'FUTURE' SECURITY CAMERA, INCLUDE A PULL STRING.

2

ARCHITECTURE
ENGINEERING
INTERIOR DESIGN

HSR ASSOCIATES INC.
100 MILWAUKEE STREET
LA CROSSE, WISCONSIN
PHONE: 608.784.1830
FAX: 608.782.5844
WEB SITE: www.hsrassociates.com

Consultant:

galileo CONSULTING GROUP
2920 EAST AVENUE SOUTH SUITE 102
LA CROSSE, WISCONSIN 54601
PHONE: (608) 787-9106 FAX: (608) 787-8995
E-MAIL: PPopowich@galileo-group.us

Project Title: **WESTERN TECHNICAL COLLEGE APPRENTICESHIP CENTER REMODEL**

Project Location: **2860 21ST PL S**
LA CROSSE, WI 54601

Sheet Title: ELECTRICAL SITE PLAN

HSR Project Number: **19021**

Project Date: **FEBRUARY 2020**

Drawn By: **GALILEO**

Key Plan:

Revisions:

No.	Description	Date
2	ADDENDUM #2	2-25-20

Graphic Scale: **VARIES**

Last Update: **2/25/2020**

E001R

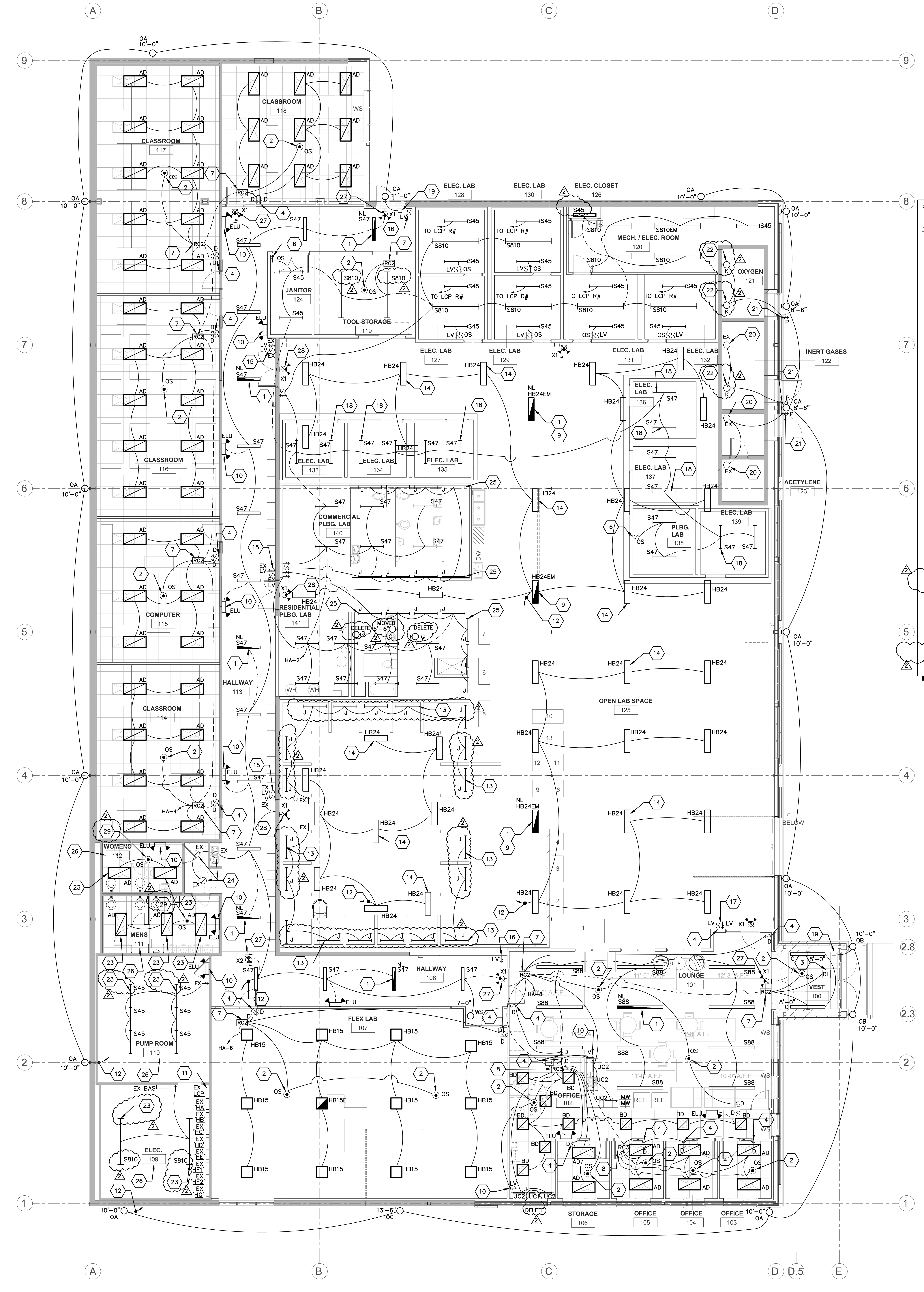
CLASSROOM 117
CLASSROOM 118
CLASSROOM 116
COMPUTER 115
CLASSROOM 114
WOMENS 112
MENS 111
PUMP ROOM 110
ELEC. 109
JANITOR 124
TOOL STORAGE 119
ELEC. LAB 128
ELEC. LAB 130
ELEC. CLOSET 126
MECH. / ELEC. ROOM 120
OXYGEN 121
INERT GASES 122
ACETYLENE 123
ELEC. LAB 127
ELEC. LAB 129
ELEC. LAB 131
ELEC. LAB 132
ELEC. LAB 136
ELEC. LAB 137
ELEC. LAB 133
ELEC. LAB 134
ELEC. LAB 135
COMMERCIAL PLBG. LAB 140
PLBG. LAB 138
ELEC. LAB 139
RESIDENTIAL PLBG. LAB 141
HALLWAY 113
OPEN LAB SPACE 125
HALLWAY 108
FLEX LAB 107
LOUNGE 101
VEST 100
OFFICE 102
STORAGE 106
OFFICE 105
OFFICE 104
OFFICE 103
A
B
C
D
D.5
E
1
2
2.3
2.8
3
4
5
6
7
8
9

1 LIGHTING PLAN
E101R SCALE: 1/8" = 1'-0" 1907-E-LP01

GENERAL NOTES:

a. LIGHTING CONTROL SYSTEM BASED UPON WATTSTOPPER MANUFACTURER. EQUALS Not ALLOWED UNLESS NOTED OTHERWISE, THIS IS A CAMPUS WIDE STANDARD. REFER TO DETAILS ON SHEET **E402**.

KEYED LIGHTING PLAN NOTES E101:

1. THIS FIXTURE CONTROLLED BY CIRCUIT BREAKER ONLY AND SHALL SERVE AS A NIGHT LIGHT.
2. PROVIDE CEILING MOUNTED DUAL TECH OCCUPANCY SENSOR TO INTERFACE WITH ROOM CONTROLLER. ROOM CONTROLLER IS EITHER A LMRC-211, LMRC-212 OR A LMRC-213. REFER TO INSTALLATION DETAILS ON SHEET **E402**. TYPICAL
3. PROVIDE ONE (1) WATTSTOPPER DAYLIGHT PHOTOSENSOR LMLS 500 TO CONTROL LIGHT FIXTURES IN DAYLIGHT AREAS. PHOTOSENSOR SHALL INTERFACE WITH LMRC-211, LMRC-212, OR LMRC-213. LOCATE AND INSTALL AS RECOMMENDED BY MANUFACTURER. REFER TO INSTALLATION DETAILS ON SHEET **E402.**
4. PROVIDE WATTSTOPPER LMDM MULTILOCATION 0-10VDC DIMMING CONTROLLER(S) TO INTERFACE WITH A LMRC-211, LMRC212 OR LMRC-213. REFER TO INSTALLATION DETAILS ON SHEET **E402**.
5. PROVIDE ONE (1) WATTSTOPPER LMSW-101-I MULTILOCATION SINGLE BUTTON ON/OFF DIGITAL LOW VOLTAGE ROOM SWITCH TO INTERFACE WITH A LMRC-211, LMRC-212 OR LMRC-213 ROOM CONTROLLER FOR UNDERCABINET LIGHTS. REFER TO INSTALLATION DETAILS ON SHEET **E402**.
6. PROVIDE INFRARED SINGLE RELAY WALL-MOUNTED LINE VOLTAGE OCCUPANCY SENSOR. WATTSTOPPER PW-100.
7. PROVIDE WATTSTOPPER LMRC-212, TWO RELAY, ON/OFF/0-10 VOLT DIMMING ROOM CONTROLLER SUITABLE FOR CONTROL OF LED. REFER TO INSTALLATION DETAILS ON SHEET **E402.** RC2 SYMBOL IS TYPICAL FOR THIS CONTROLLER.
8. PROVIDE WATTSTOPPER LMRC-213, THREE RELAY, ON/OFF/0-10 VOLT DIMMING ROOM CONTROLLER SUITABLE FOR CONTROL OF LED. REFER TO INSTALLATION DETAILS ON SHEET **E402.** RC3 SYMBOL IS TYPICAL FOR THIS CONTROLLER.
9. LIGHTING FIXTURE INCLUDES AN EMERGENCY EGRESS LIGHTING BATTERY BACKUP, PROVIDE AN UNSWITCHED 'HOT' BRANCH-CIRCUIT.
10. PROVIDE ONE (1) WATTSTOPPER LMSW-101-I MULTILOCATION SINGLE BUTTON ON/OFF DIGITAL LOW VOLTAGE ROOM SWITCH TO INTERFACE WITH A LMRC-211, LMRC-212 OR LMRC-213 ROOM CONTROLLER FOR UNDERCABINET LIGHTS. REFER TO INSTALLATION DETAILS ON SHEET **E402**.
11. EXISTING HUBBELL MODEL 'CX' LIGHTING CONTROL PANEL TO REMAIN AS IS. RE-USE EXISTING BRANCH-CIRCUIT WIRING AND RELAY SWITCH-LEG WIRING AS NOTED. REFER TO PHOTO **#29/E501**.
12. CONNECT TO EXISTING HUBBELL 'CX' LIGHTING CONTROL PANEL LOCATED IN ELECTRICAL ROOM #109. REUSE EXISTING SWITCH-LEG RELAY WIRING TO THE EXTENT POSSIBLE.
13. INSTALL A NEW 4'-0" LED STRIP LIGHTING FIXTURE IN NEW WELDING HOOD. REUSE EXISTING SWITCH-LEG WIRING, JUNCTION BOX, CONDUIT, FITTINGS, ETC TO THE EXTENT POSSIBLE FROM PREVIOUSLY REMOVED FLUORESCENT LIGHTING FIXTURE. REFER TO PHOTO **#28/E501**. TYPICAL
14. INSTALL A NEW LED HIGH BAY LIGHTING FIXTURE TO REPLACE A PREVIOUSLY REMOVED FLUORESCENT HIGH BAY FIXTURE. REUSE EXISTING RELAY SWITCH-LEG WIRING, JUNCTION BOX, CONDUIT, FITTING, TWIST-LOCK RECEPTACLE, SO CORD, JACK-CHAIN, ETC. TO THE EXTENT POSSIBLE. THE INTENT IS TO REPLACE AN EXISTING FLUORESCENT HIGH BAY FIXTURE WITH LED IN THE SAME LOCATION. TYPICAL
15. EXISTING LOW VOLTAGE DIGITAL LIGHT SWITCH CONNECTED TO HUBBELL 'CX' LIGHTING CONTROL PANEL TO REMAIN AS IS. REFER TO PHOTO **#19/E501**.
16. REINSTALL A PREVIOUSLY REMOVED DIGITAL LOW VOLTAGE LIGHT SWITCH AND CONNECT TO HUBBELL 'CX' LIGHTING CONTROL PANEL. PROGRAM LOW VOLTAGE LIGHT SWITCH TO CONTROL TYPE S47 LIGHT FIXTURES IN HALLWAY **#108 & #113**.
17. REINSTALL A PREVIOUSLY REMOVED DIGITAL LOW VOLTAGE LIGHT SWITCH AND CONNECT TO HUBBELL 'CX' LIGHTING CONTROL PANEL. PROGRAM LOW VOLTAGE LIGHT SWITCH TO CONTROL TYPE HB18 LIGHT FIXTURES IN OPEN LAB SPACE **#125.**
18. INSTALL LED STRIP LIGHT FIXTURE IN OPEN ATTIC SPACE IN RESIDENTIAL LAB. COORDINATE LOCATION WITH ELECTRICAL APPRENTICESHIP INSTRUCTOR.
19. PROVIDE AN 'EMERGI-LITE' MODEL #EMILC32-S OR EQUAL LOW CAPACITY MINI INVERTER WITH 32 WATT CAPACITY. REFER TO DETAIL **2/E101**.
20. EXISTING HAZARDOUS LOCATION RATED LIGHTING FIXTURE TO REMAIN AS IS. RECONNECT AS REQUIRED. REFER TO PHOTO **#30/E501**.
21. REINSTALL A PREVIOUSLY REMOVED PILOT LIGHT SINGLE-POLE LIGHT SWITCH. PROVIDE A WEATHER PROOF COVER PLATE. RECONNECT EXISTING HAZARDOUS LOCATION RATED LIGHT FIXTURE, REUSE EXISTING BRANCH-CIRCUIT WIRING, ETC. TO THE EXTENT POSSIBLE.
22. INSTALL A NEW TYPE 'K' HAZARDOUS RATED LIGHT FIXTURE. IN OXYGEN ROOM #121 THEY SHALL REPLACE EXISTING FLUORESCENT FIXTURES PREVIOUSLY REMOVED. REUSE EXISTING BRANCH-CIRCUIT WIRING, JUNCTION BOXES, CONDUIT, FIXTURE WHIP, LIGHT SWITCH, ETC. TO THE EXTENT POSSIBLE. **CAUTION**: THIS ROOM WILL NEED TO BE WIRED TO MATCH ADJACENT HAZARDOUS RATED ROOMS, PROVIDE SEAL-OFFS, ETC. AS REQUIRED. RECOMMEND FIELD VERIFICATION OF EXISTING ADJACENT HAZARDOUS RATED ROOMS PRIOR TO SUBMITTING BID.
23. INSTALL A NEW 2'X4' LED LAY-IN/STRIP LIGHT FIXTURE TO REPLACE EXISTING FLUORESCENT PREVIOUSLY REMOVED. REUSE EXISTING BRANCH-CIRCUIT WIRING, JUNCTION BOXES, CONDUIT, FIXTURE WHIP, LIGHT SWITCH, ETC. TO THE EXTENT POSSIBLE.
24. EXISTING LED RECESSED DOWN LIGHT TO REMAIN AS IS.
25. INSTALL LIGHTING FIXTURE IN RECESSED FLOOR. REFER TO ARCHITECTURAL DRAWINGS FOR CONSTRUCTION DETAILS.
26. IN ELECTRICAL ROOM #109, PUMP ROOM #110, MENS ROOM #111 AND WOMENS ROOM #112, REUSE EXISTING LIGHTING BRANCH-CIRCUIT WIRING.
27. REINSTALL A PREVIOUSLY REMOVED EXIT LIGHTING FIXTURE.
28. EXISTING EXIT LIGHT TO REMAIN AS IS.
29. REUSE EXISTING CEILING MOUNTED OCCUPANCY SENSOR.

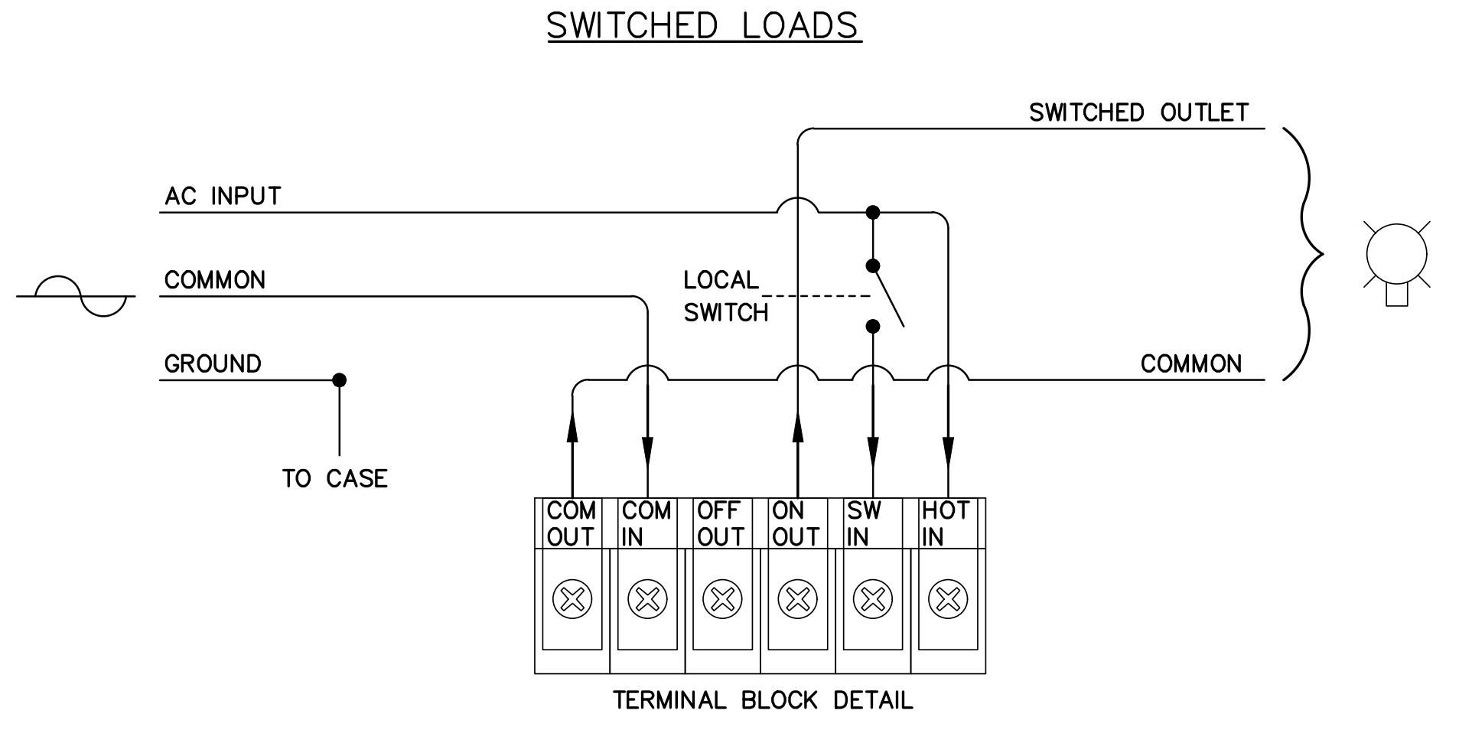
SWITCHED LOADS
AC INPUT
COMMON
GROUND
TO CASE
LOCAL SWITCH
SWITCHED OUTLET
COMMON
COM OUT
COM IN
OFF OUT
ON OUT
SW IN
HOT IN
TERMINAL BLOCK DETAIL

2 TERMINAL BLOCK DIAGRAM
E101R N.T.S. E-TERMINAL BLOCK DIA

ARCHITECTURE
ENGINEERING
INTERIOR DESIGN

HSR ASSOCIATES INC.
100 MILWAUKEE STREET
LA CROSSE, WISCONSIN
PHONE: 608.784.1830
FAX: 608.782.5844
WEB SITE: www.hsrassociates.com

Consultant:

Project Title: **WESTERN TECHNICAL COLLEGE APPRENTICESHIP CENTER REMODEL**

Project Location: **2860 21ST PL S LA CROSSE, WI 54601**

Sheet Title: LIGHTING PLAN

HSR Project Number: **19021**

Project Date: **FEBRUARY 2020**

Drawn By: **GALILEO**

Key Plan:

Revisions:

No.	Description	Date
2	ADDENDUM #2	2-25-20

Graphic Scale: **VARIES**

Last Update: **2/25/2020**

E101R

KEYED LARGE SCALE PLANS NOTES E201: ⬡

1. PROVIDE A RESIDENTIAL GRADE 120 VAC, HARD-WIRE INTERCONNECTED, COMBINATION SMOKE DETECTOR/ CO DETECTOR WITH BATTERY BACKUP. PROVIDE KIDDE, MODEL #KN-COSM-IBA OR EQUAL BY FIRST ALERT OR X-SENSE.
2. PROVIDE A HEAT/VENT/LIGHT/NIGHT-LIGHT COMBINATION EXHAUST FAN. REFER TO LIGHTING FIXTURE SCHEDULE.
3. PROVIDE A 40 AMP., 125/250 VAC, RESIDENTIAL GRADE, 4-WIRE FLUSH MOUNTED 'RANGE' RECEPTACLE. PROVIDE A 2-GANG STAINLESS STEEL OR CHROME COVER PLATE. PROVIDE ONE (1) 8/3 NM CABLE HOME RUN FOR FOUR-WIRE FLUSH-MOUNTED ELECTRIC RANGE RECEPTACLE. PROVIDE A DOUBLE GANG BOX APPROVED FOR RANGE CONDUCTORS (ALLIED RD-42 OR EQUIVALENT).
4. PROVIDE ONE (1) 10/3 NM CABLE HOME RUN FOR ELECTRIC DRYER FLUSH-MOUNTED FOUR-WIRE RECEPTACLE. MOUNT DOUBLE GANG BOX APPROVED FOR #10 CONDUCTORS (ALLIED RD-42 OR EQUIVALENT) 40" ABOVE FLOOR. INSTALL DOUBLE GANG CHROME OR STAINLESS STEEL COVER PLATE OVER RECEPTACLE.
5. PROVIDE ONE (1) 12/2 NM CABLE HOME RUN FOR OUTDOOR RECEPTACLES. ELECTRICAL CONTRACTOR TO PROVIDE AND INSTALL ONE (1) SINGLE GANG BOX FLUSH WITH EXTERIOR WALL SURFACE, ONE (1) WEATHER RESISTANT/TAMPER RESISTANT GFCI RECEPTACLE AND ONE (1) EXTRA-DUTY RATED IN-USE WEATHERPROOF COVER.
6. PROVIDE AND INSTALL ONE (1) 200 AMP., 120/240 VOLT, SINGLE PHASE, 40 SPACE MAIN BREAKER ELECTRICAL PANEL WITH PLUG-ON NEUTRAL CAPABILITY (SQUARE D QO140M200P OR EQUIVALENT) FOR ARC-FAULT, GROUND-FAULT, AND DUAL FUNCTION (COMBINATION ARC-FAULT/GROUND-FAULT) CIRCUIT BREAKERS. INSTALL A SURGE BREAKER WITH PLUG-ON NEUTRAL (SQUARE D QO250PSPD OR EQUIVALENT) IN PANEL. SURFACE MOUNT PANEL ON PLYWOOD BACK BOARD.
7. PROVIDE A RESIDENTIAL GRADE 30 AMP., 240 VAC, 2-POLE, AIR CONDITIONER DISCONNECT WITH GFCI DUPLEX RECEPTACLE.
8. NOT USED.
9. PROVIDE TWO (2) 5/8" DIA X 8'-0" GROUND RODS, SEPARATE BY 6'-0". PROVIDE A BARE #4 STRADED COPPER CONDUCTOR INSTALLED IN ¾" SCHEDULE 40 PVC CONDUIT.
10. MAKE FINAL CONNECTION TO SOLAR SYSTEM EQUIPMENT PROVIDED BY OWNER, INSTALLED BY ELECTRICAL CONTRACTOR. REFER TO PHOTOS **#1/E404**, **#2/E404**, **#3/E404** & **#4/E404**. REFER TO DETAIL **5/E404**.
11. PROVIDE A 30 AMP., 250 VAC, DOUBLE POLE, NON-FUSED, DISCONNECT FOR SOLAR SYSTEM WIRING. REFER TO DETAIL **5/E404**.
12. PROVIDE A 200 AMP., XCEL APPROVED, RESIDENTIAL METER SOCKET. REFER TO ELECTRIC RISER DIAGRAM **7/E402**.
13. PROVIDE A 'ARLINGTON' MODEL #GBB50P BRONZE HEAVY DUTY GROUNDING BRIDGE FOR INTERSYSTEM GROUNDING. PROVIDE A BARE COPPER #4 CONDUCTOR TO NEUTRAL BAR OF PANELBOARD 'A'.
14. PROVIDE ONE (1) CAT 6 AND ONE (1) RG-6 COAX CABLE AND TERMINATE AT TELEPHONE/CABLE T.V TERMINAL BLOCKS AND/OR SPLITTERS LOCATED ADJACENT TO PANELBOARD 'A'.
15. PROVIDE A LINE VOLTAGE SINGLE-POLE LED RESIDENTIAL GRADE DIMMING SWITCH.
16. PROVIDE A LINE VOLTAGE SINGLE-POLE VARIABLE SPEED CONTROL SWITCH FOR PADDLE FAN.
17. PROVIDE A LINE VOLTAGE SINGLE-POLE RESIDENTIAL GRADE OCCUPANCY SENSOR.
18. PROVIDE A BARE #4 COPPER CONDUCTOR AND TERMINATE AT NEUTRAL BAR IN PANELBOARD 'A' TO SIMULATE SERVICE SUPPLEMENTAL GROUND/BOND AT WATER METER, INSTALL JUMPER BOND AROUND SIMULATED WATER METER. COORDINATE WITH ELECTRICAL APPRENTICESHIP INSTRUCTOR.

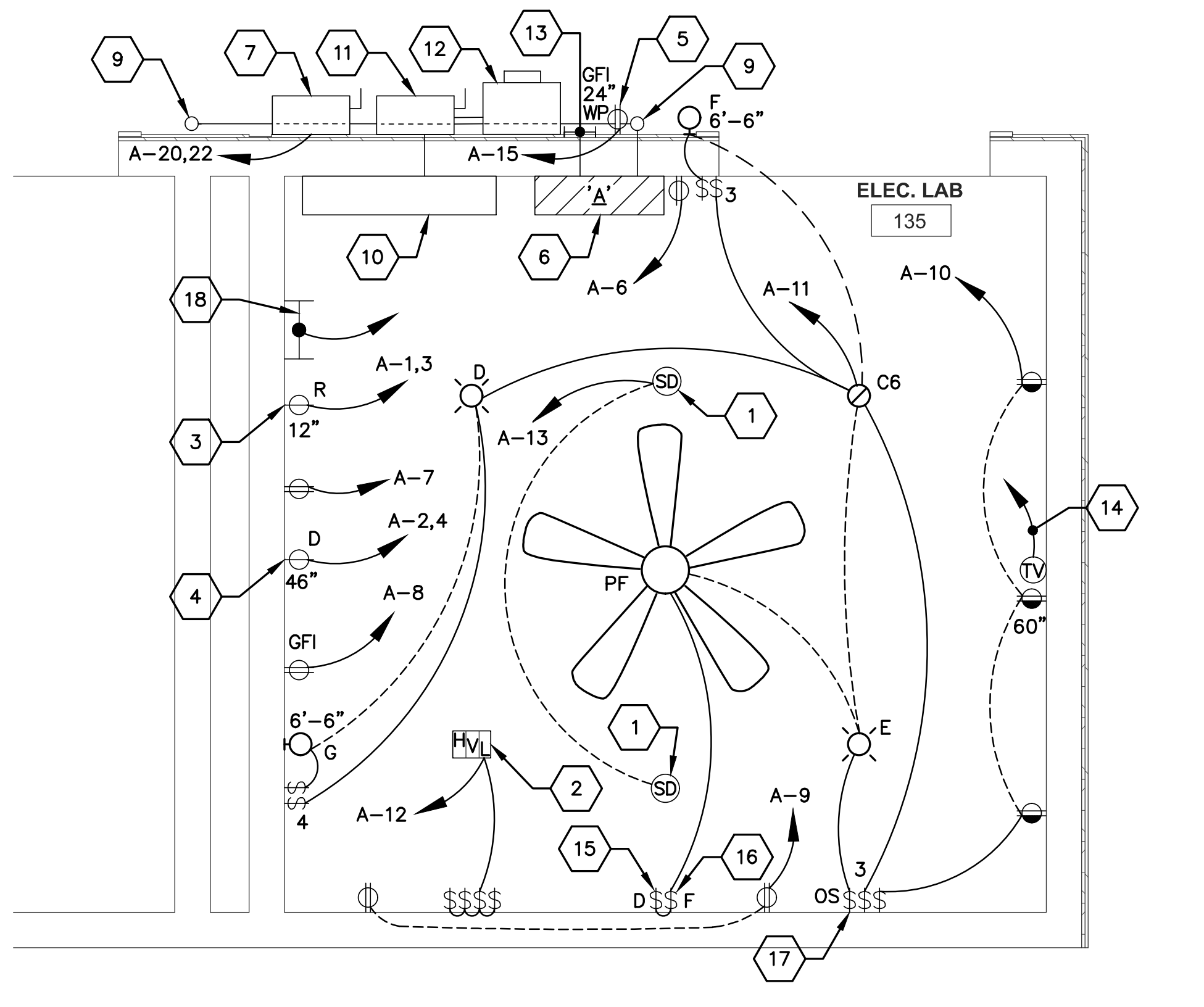

2 ENLARGED PLAN ELECTRICAL LABS 133-135 (TYPICAL)
E201R SCALE: 1/2" = 1'-0" 1907-E-PP01-ENLGD

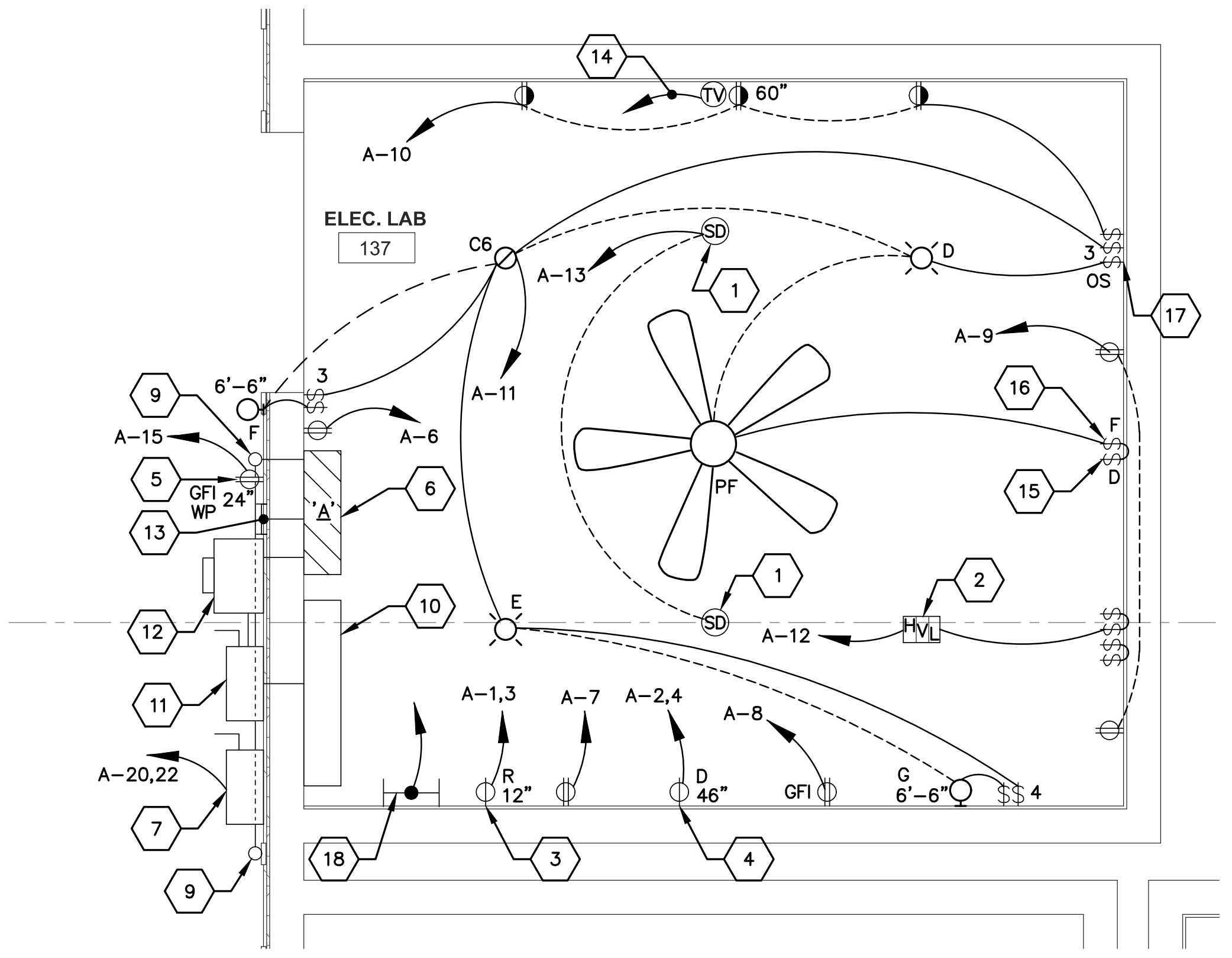

3 ENLARGED PLAN ELECTRICAL LAB 134-135 (TYPICAL)
E201R SCALE: 1/2" = 1'-0" 1907-E-PP01-ENLGD

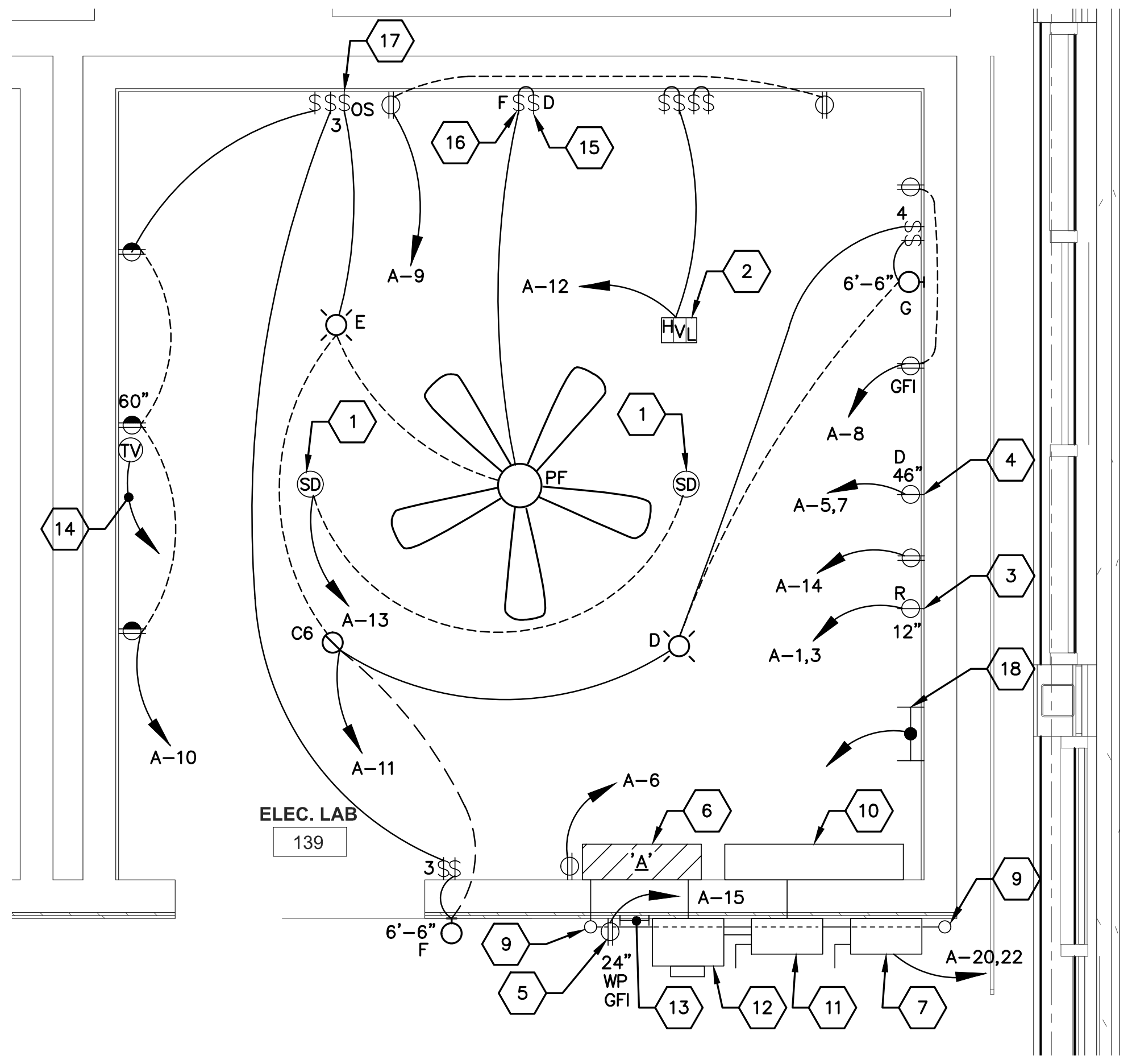

4 ENLARGED PLAN ELECTRICAL LAB 139
E201R SCALE: 1/2" = 1'-0" 1907-E-PP01-ENLGD

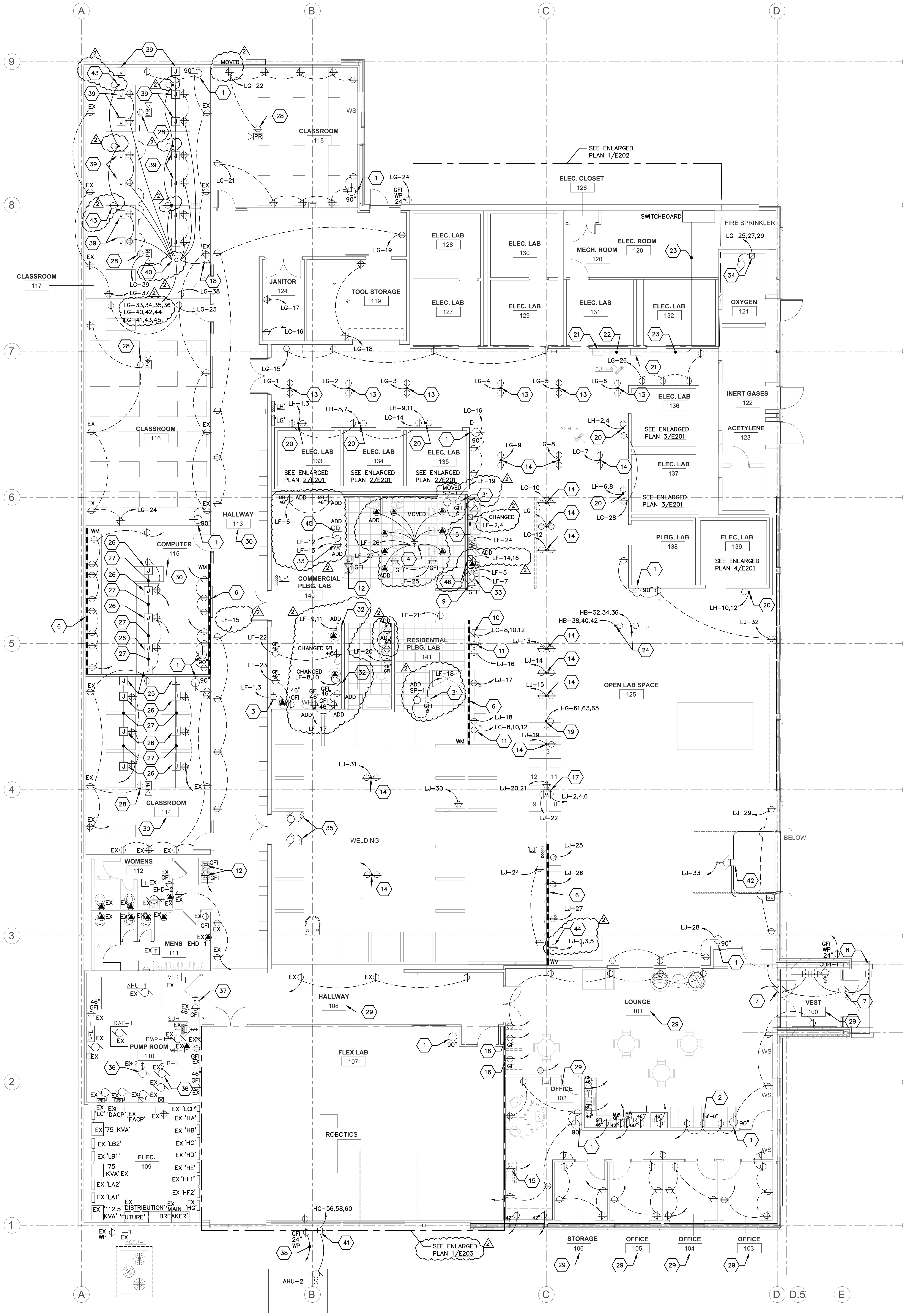

1 POWER PLAN
E201R SCALE: 1/8" = 1'-0" 1907-E-PP01

KEYED POWER PLAN NOTES E201:

GENERAL NOTES:

A. ALL EXISTING DUPLEX AND DOUBLE DUPLEX RECEPTACLES WITH THE LETTERS 'EX' ADJACENT TO THE SYMBOL SHALL BE REPLACED WITH 'GRAY' RECEPTACLES AS SPECIFIED. PROVIDE A NEW STAINLESS STEEL COVER PLATE. REUSE EXISTING BRANCH-CIRCUIT WIRING TO THE EXTENT POSSIBLE.

SPECIFIC NOTES: ⬡

1. ELECTRICAL CONTRACTOR SHALL INSTALL A WTC 'STANDARDIZED' LATHEM AIRTIME CLOCK AND BACKBOX AT THIS LOCATION PROVIDED BY WTC FACILITY MAINTENANCE DEPARTMENT (OWNER). INSTALL A LATHEM AIRTIME BACKBOX WITH 120VAC RECEPTACLE PROVIDED BY OWNER. INSTALL A 120VAC LATHEM AIRTIME WIRELESS CLOCK PROVIDED BY OWNER. PROVIDE 120VAC BRANCH-CIRCUIT WIRING AND MAKE FINAL CONNECTION AS REQUIRED.
2. PROVIDE A DUPLEX RECEPTACLE AND MOUNT BEHIND WALL-MOUNTED INFORMATION MONITOR.
3. PROVIDE A 30 AMP., 250 VAC, 2-POLE, NON-FUSED, NEMA 1 DISCONNECT FOR RESIDENTIAL GRADE TYPE ELECTRIC WATER HEATER.
4. MAKE FINAL CONNECTION TO 'HARD-WIRED' URINAL, SINK AND TOILET FLUSH VALVE. ELECTRICAL CONTRACTOR SHALL INSTALL LOW-VOLTAGE WIRING INSIDE A RACEWAY. COORDINATE WITH PLUMBING CONTRACTOR. MAKE FINAL CONNECTION TO TRANSFORMER FOR AUTOMATIC FLUSH VALVES FURNISHED BY PLUMBING CONTRACTOR, INSTALLED BY ELECTRICAL CONTRACATOR. COORDINATE WITH PLUMBING CONTRACTOR.
5. PROVIDE A 30 AMP, 2-POLE, 250 VAC, GENERAL DUTY, NEMA 1, NON-FUSED DISCONNECT FOR COMMERCIAL TYPE GARBAGE DISPOSAL. MAKE FINAL CONNECTION TO 1-1/2 HP, 208 VAC, 1-PHASE COMMERCIAL GARBAGE DISPOSAL, WIRE ASSOCIATED START/STOP CONTROL SWITCH AND SOLENOID VALVE. 2
6. PROVIDE WIRMOLD 4000 SURFACE RACEWAY AND ALL ASSOCIATED FITTINGS.
7. MAKE FINAL CONNECTION TO MOTOR ASSISTED DOOR OPENER, PUSHBUTTON OPERATORS SHALL BE 'HARD-WIRED', CONNECT TO A DEDICATED 20 AMP., 120VAC BRANCH-CIRCUIT.
8. INSTALL LOW VOLTAGE HARD-WIRED PUSHBUTTON OPERATORS IN PEDESTAL. REFER TO PHOTO **#1/E301**.
9. PROVIDE A 20 AMP., 120 VAC, DUPLEX RECEPTACLE MOUNTED IN BASE CABINET FOR RESIDENTIAL TYPE GARBAGE DISPOSAL, CONNECT TO A SINGLE-POLE LIGHT SWITCH INSTALLED ABOVE COUNTER.
10. REINSTALL A PREVIOUSLY REMOVED 30 AMP., NON-FUSED, 208 VAC, 3-POLE, HEAVY DUTY, NEMA DISCONNECT SWITCH. REFER TO NOTE #26 ON SHEET **E003**.
11. REINSTALL A PREVIOUSLY REMOVED 30 AMP., 208VAC, 3-PHASE, TWIST-LOCK RECEPTACLE. REFER TO NOTE #27 ON SHEET **E003**. REUSE EXISTING JUNCTION BOX AND RAISED COVER.
12. PROVIDE A 20 AMP., 120VAC GFCI DUPLEX RECEPTACLE FOR ELECTRIC WATER COOLER, COORDINATE LOCATION WITH PLUMBING CONTRACTOR.
13. REINSTALL A PREVIOUSLY REMOVED CORD REEL IN THIS APPROXIMATE LOCATION, REUSE EXISTING JUNCTION BOX, RECEPTACLE, RAISED COVER PLATE, ETC. TO THE EXTENT POSSIBLE. REFER TO NOTE #19 ON SHEET **E003**. REFER TO PHOTO **#9/E501**.
14. PROVIDE A CEILILNG MOUNTED RETRACTABLE CORD REEL IN THIS APPROXIMATE LOCATION. PROVIDE A 20 AMP., 120VAC, 3-WIRE DUPLEX RECEPTACLE AND RAISED COVER PLATE AT CEILING. HUBBELL, MODEL #HBL45123R220W OR EQUAL. CORD REEL INCLUDES TWO (2) 20 AMP., GRAY DUPLEX RECEPTACLES.
15. PROVIDE A 20 AMP. 120VAC, DUPLEX RECEPTACLE FOR COPY MACHINE.
16. PROVIDE A 20 AMP., 120VAC, GFI, DUPLEX RECEPTACLE FOR VENDING MACHINE.
17. PROVIDE A 20 AMP. 208 VAC, SINGLE-PHASE, 3-WIRE, TWIST-LOCK RECEPTACLE, NEMA L6-20. PROVIDE A MATCHING TWIST-LOCK PLUG AND 6'-0" SO CORD ON NEW EQUIPMENT. SURFACE MOUNT RECEPTACLE ON STEEL COLUMN.
18. PROVIDE A 20 AMP., 120VAC, 'EMERGENCY' MUSHROOM TYPE SINGLE-POLE SWITCH WITH ENGRAVED COVER. PLEASE NOTE THIS SWITCH SHALL DISCONNECT ALL POWER TO RECEPTACLES BELOW FURNITURE VIA CONTACTOR(S). REFER TO DETAIL **4/E404** FOR EXAMPLE.
19. PROVIDE A 20 AMP. 208 VAC, THREE-PHASE, 4-WIRE, TWIST-LOCK RECEPTACLE, NEMA L15-20 ATTACHED TO AN SO CORD, SUSPEND FROM CEILING. PROVIDE A MATCHING TWIST-LOCK PLUG AND 6'-0" SO CORD ON NEW EQUIPMENT. REFER TO PHOTOS **#11/E501, #8/E404, & #9/E404** FOR INSTALLATION EXAMPLE.
20. PROVIDE A 50 AMP. 125/250 VAC, SINGLE-PHASE, 4-WIRE, TWIST-LOCK RECEPTAREICLE, NEMA L14-50 ATTACHED TO AN SO CORD, SUSPEND FROM CEILING, LOCATE DIRECTLY ABOVE RESIDENTIAL LAB OVERHEAD ELECTRIC SERVICE. PROVIDE A MATCHING TWIST-LOCK PLUG AND 6'-0" SO CORD ON NEW OVERHEAD SERVICE CONDUCTORS EXTENDING FROM RESIDENTIAL LAB OVERHEAD SERVICE MAST. REFER TO PHOTO **#11/E501, #8/E404 & #9/E404** FOR INSTALLATION EXAMPLE. REFER TO ELECTRIC SERVICE RISER DIAGRAM **7/E402**.
21. REINSTALL EXISTING WIRE-PULLING SYSTEM JUNCTION BOX PREVIOUSLY REMOVED, REFER TO NOTE #23 ON SHEET E003. REFER TO PHOTO **#7/E501**.
22. REINSTALL EXISTING 3" EMT CONDUIT BETWEEN WIRE-PULLLING SYSTEM JUNCTION BOXES. REFER TO PHOTO **#7/E501**.
23. REINSTALL 3-3" EMT CONDUITS BETWEEN WIRE PULLING SYSTEM JUNCTION BOX AND SWITCHBOARD #1 LOCATED IN ELECTRICAL ROOM #120. REFER TO NOTE #24 ON SHEET E003. REFER TO PHOTOS **#2/E501, #3/E501**, **#4/E501**, **#5/E501**, **#6/E501**, **#7/E501** & **#8/E501**.
24. PROVIDE A 50 AMP. 480 VAC, THREE-PHASE, 4-WIRE, TWIST-LOCK RECEPTACLE, NEMA L16-50 ATTACHED TO AN SO CORD, SUSPEND FROM CEILING. PROVIDE A MATCHING TWIST-LOCK PLUG AND 6'-0" SO CORD ON NEW EQUIPMENT. REFER TO PHOTOS **#8/E404** & **#9/E404** FOR INSTALLATION EXAMPLE. CONNECT TO EXISTING PANELBOARD 'HB' LOCATED IN ELECRICAL ROOM #109, REUSE EXISTING 50 AMP. 480 VAC WELDING CIRCUIT CONDUCTORS AND CONDUIT PRVIOUSLY REMOVED TO THE EXTENT POSSIBLE. RE-USE EXISTING 50/3 CIRCUIT BREAKERS FROM PREVIOUSLY REMOVED WELDING CIRCUITS. COORDINATE WITH INDUSTRIAL APPRENTICESHIP INSTRUCTOR.
25. PROVIDE A DOUBLE GANG JUNCTION BOX MOUNTED FLUSH IN WALL WITH A SINGLE GANG STAINLESS STEEL COVER PLATE, PROVIDE A 90 DEGREE LIQUID TIGHT (SEAL-TIGHT) CONNECTOR AND MAKE FINAL CONNECTION TO SURFACE MOUNTED JUNCTION BOXES LOCATED ON FRAMEWORK OF FURNITURE. REFER TO PHOTO **#27/E501** FOR EXAMPLE OF WIRING CONNECTION TO FURNITURE. COORDINATE WITH FURNITURE SUPPLIER.
26. PROVIDE SURFACE MOUNTED JUNCTION BOXES AND ATTACH TO FURNITURE FRAMEWORK AND/OR MAKE FINAL CONNECTION TO JUNCTION BOXES INSTALLED INTEGRAL WITH FURNITURE. COORDINATE WITH FURNITURE SUPPLIER. REFER TO PHOTOS **#24/E501**, **#25/E501** AND **#26/E501** FOR FURNITURE EXAMPLES.
27. PROVIDE ½" SEALTIGHT WITH #12 THWN-2 CONDUCTORS, SURFACE JUNCTION BOXES, 20 AMP., 120VAC, DUPLEX RECEPTACLES, ETC. AND INSTALL TO FRAMEWORK OF FURNITURE OR MAKE FINAL CONNECTION TO DUPLEX RECEPTACLES INSTALLED INTEGRAL WITH FURNITURE. COORDINATE WITH FURNITURE SUPPLIER.
28. PROVIDE A CEILING-MOUNTED DUPLEX RECEPTACLE FOR OVERHEAD PROJECTOR. INSTALL RECEPTACLE IN 2'X2' MOUNTING PLATE SUPPLIED BY WTC IT DEPARTMENT. COORDINATE WITH WTC IT DEPARTMENT.
29. FOR VESTIBULE #100, LOUNGE ROOM #101, HALLWAY #108 AND ADJACENT AREAS, HOME-RUN SYMBOLS (ARROWS) INDICATE A 20 AMP., 120 VAC BRANCH-CIRCUIT AND SHALL BE CONNECTED TO PANELBOARDS 'LA1 OR 'LA2' LOCATED IN ELECTRICAL ROOM #109. REUSE EXISTING 20/1 CIRCUIT BREAKERS IN THESE PANELBOARDS.
30. FOR HALLWAY #113, AND CLASSROOMS #114 & #115 HOME-RUN SYMBOLS (ARROWS) INDICATE A 20 AMP., 120 VAC BRANCH-CIRCUIT AND SHALL BE CONNECTED TO PANELBOARDS 'LB1 OR 'LB2' LOCATED IN ELECTRICAL ROOM #109. REUSE EXISTING 20/1 CIRCUIT BREAKERS IN THESE PANELBOARDS.
31. PROVIDE A 20 AMP., 120VAC, SINGLE RECEPTACLE FOR RESIDENTIAL TYPE SUMP PUMP CONNECTION. COORDINATE WITH PLUMBING APPRENTICESHIP INSTRUCTOR.
32. PROVIDE A 30 AMP., 250VAC, 2-POLE, NON-FUSED, NEMA 1 DISCONNECT FOR INSTANTANEOUS ELECTRIC WATER HEATER. 2
33. PROVIDE A 20 AMP., 120VAC, 3-WIRE, SINGLE RECEPTACLE FOR RESIDENTIAL GRADE DISHWASHER CONNECTION. INSTALL RECEPTACLE IN BASE CABINET, PROVIDE A 6'-0" #12/3 SO CORD AND MATCHING PLUG AND ATTACH TO DISHWASHER. COORDINATE WITH PLUMBING APPRENTICESHIP INSTRUCTOR.
34. PROVIDE A 30 AMP., 250VAC, 3-POLE, HEAVY DUTY, NON-FUSED, NEMA 1 DISCONNECT SWITCH FOR AIR COMPRESSOR.
35. RECONNECT A PREVIOUSLY DISCONNECTED AND REMOVED COOLING SYSTEM FOR WELDERS IN THIS LOCATION. REUSE EXISTING CONDUIT, JUNCTION BOXES, DISCONNECT SWITCHES, ETC. TO THE EXTENT POSSIBLE. REFER TO NOTE #37 ON SHEET **E003**. REFER TO PHOTOS **#5/E404** AND **#6/E404**. ELECTRICAL CONTRACTOR SHALL FIELD VERIFY NEAREST AVAILABLE PANELBOARD FOR RE-CONNECTION.
36. BOILER #1 IS CONNECTED TO PANELBOARD 'LB2', CIRCUIT #29. BOILER #2 IS CONNECTED TO CIRCUIT #27 IN THE SAME PANELBOARD. REMOVE THE EXISTING SINGLE POLE BRANCH CIRCUIT BREAKERS AND REPLACE WITH SHUNT-TRIP CIRCUIT BREAKERS. PROVIDE AN EMERGENCY BOILER SHUT OFF SWITCH AND INSTALL ADJACENT TO SERVICE DOOR FOR ENTERING INTO BOILER ROOM. EMERGENCY SHUT-OFF SWITCH SHALL DISCONNECT BOTH BOILERS WHEN ENERGIZED. PROVIDE A 120VAC CONTROL CIRCUIT AS REQUIRED FROM PANELBOARD LB2.
37. PROVIDE AN MUSHROOM TYPE EMERGENCY BOILER SHUT-OFF SWITCH IN THIS LOCATION TO DISCONNECT BOILERS B-1 AND B-2. REFER TO DETAIL **4/E404** FOR EXAMPLE.
38. PROVIDE A 20 AMP., 120VAC HOME-RUN BRANCH-CIRCUIT AND CONNECT TO AN SPARE CIRCUIT BREAKER IN PANELBOARD 'LA1' OR 'LA2' LOCATED IN ELECTRICAL ROOM #109.
39. ELECTRICAL CONTRACTOR SHALL PROVIDE AND INSTALL A 'CONNECT TRAC' FLOOR SYSTEM. PROVIDE SURFACE MOUNTED COMBINATION POWER AND LOW VOLTAGE MODULES AND SURFACE RACEWAY UNDER TABLES. PROVIDE MODULES WITH COMBINATION DUPLEX RECEPTACLES AND DATA JACKS AS NOTED ON DRAWINGS AND AS REQUIRED FOR FURNITURE. REFER TO DETAIL **4/E203** FOR MANUFACTURER MODEL NUMBER EXAMPLES, CONTACT CONNECTRAC SALES REP FOR EXACT MODEL NUMBERS. COORDINATE THOROUGHLY WITH WTC FACILITY PLANT DEPARTMENT AND FURNITURE VENDOR. THE INTENT IS TO SURFACE MOUNT CONNECTRAC ON EXISTING CONCRETE FLOOR AND PROVIDE POWER AND LOW VOLTAGE CABLES BETWEEN THE WALL TO A FLOOR MOUNTED COMBINATION POWER/LOW VOLTAGE MODULES LOCATED BELOW TABLES.
40. PROVIDE A 30 AMP., 120VAC, TWELVE (12) POLE MECHANICALLY HELD (CLOSED) RELAY, ELECTRICALLY OPERATED (OPEN).
41. PROVIDE A 60 AMP., 480 VAC, 3-POLE, NON-FUSED, HEAVY DUTY, NEMA 3R DISCONNECT SWITCH. CONNECT AHU-2 TO EXISTING SQUARE 'D' PANELBOARD 'HG' LOCATED IN ELECTRICAL ROOM #109, PROVIDE A 45/3 CIRCUIT BREAKER IN PANELBOARD 'HG'.
42. MAKE FINAL CONNECTION TO MOTOR OPERATED DOOR OPENER, ASSOCIATED REMOTE START/STOP PUSHBUTTON AND SAFETY MOTION SENSORS. ALL WIRING SHALL BE 'HARD-WIRED', CONNECT TO A DEDICATED 20 AMP., 120VAC BRANCH-CIRCUIT. LOW VOLTAGE CONTROL WIRING SHALL **NOT** BE INSTALLED IN FREE-AIR.

2

43. PROVIDE A 20 AMP. 208 VAC, THREE-PHASE, 4-WIRE, TWIST-LOCK RECEPTACLE, NEMA L15-20 ATTACHED TO AN SO CORD, SUSPEND FROM CEILING. COORDINATE EXACT LOCATION WITH ELECTRICAL APPRENTICESHIP INSTRUCTOR DURING ROUGH-IN CONSTRUCTION.
44. PROVIDE A 30 AMP. 208 VAC, THREE-PHASE, 4-WIRE, TWIST-LOCK RECEPTACLE, NEMA L15-30 ATTACHED TO AN SO CORD. PROVIDE A MATCHING TWIST-LOCK PLUG AND 6'-0" SO CORD ON NEW EQUIPMENT.
45. MAKE FINAL CONNECTION TO 1/3 HP, 120 VAC GARBAGE DISPOSAL, PROVIDE A 20 AMP., 120 VAC, 3-WIRE SINGLE RECEPTACLE AND MOUNT IN BASE CABINET. PROVIDE A 20 AMP., 120 VAC, SINGLE-POLE SWITCH TO CONTROL GARBAGE DISPOSAL RECEPTACLE. COORDINATE WITH PLUMBING CONTRACTOR.
46. PROVIDE A 30 AMP., 250 VAC, 2-POLE, NON-FUSED, NEMA 1 DISCONNECT FOR ELECTRIC BOOSTER HEATER FOR COMMERCIAL DISHWASHER.

OWNER EQUIPMENT LIST

1.	MARVEL BAND SAW
2.	DAKE PRESS
3.	DAKE PRESS
4.	BVA PRESS
5.	BRIDGE PORT MILL
6.	SAND BLAST CABINET
7.	LATHE
8.	LARGE PEDESTAL GRINDER
9.	SMALL PEDESTAL GRINDER
10.	IRON WORKES
11.	NEW DRILL PRESS
12.	OLD DRILL PRESS
13.	ELLIS BANDSAW

ARCHITECTURE
ENGINEERING
INTERIOR DESIGN

HSR ASSOCIATES INC.
100 MILWAUKEE STREET
LA CROSSE, WISCONSIN
PHONE: 608.784.1830
FAX: 608.782.5844
WEB SITE: www.hsrassociates.com

Consultant:
galileo CONSULTING GROUP
2920 EAST AVENUE SOUTH SUITE 102
LA CROSSE, WISCONSIN 54601
PHONE: (608) 787-9106 FAX: (608) 787-8995
E-MAIL: PPopowich@galileo-group.us

Project Title: **WESTERN TECHNICAL COLLEGE APPRENTICESHIP CENTER REMODEL**

Project Location: **2860 21ST PL S LA CROSSE, WI 54601**

Sheet Title: POWER PLAN

HSR Project Number: **19021**

Project Date: **FEBRUARY 2020**

Drawn By: **GALILEO**

Key Plan:

Revisions:

No.	Description	Date
2	ADDENDUM #2	2-25-20

Graphic Scale: **VARIES**

Last Update: **2/25/2020**

E201R

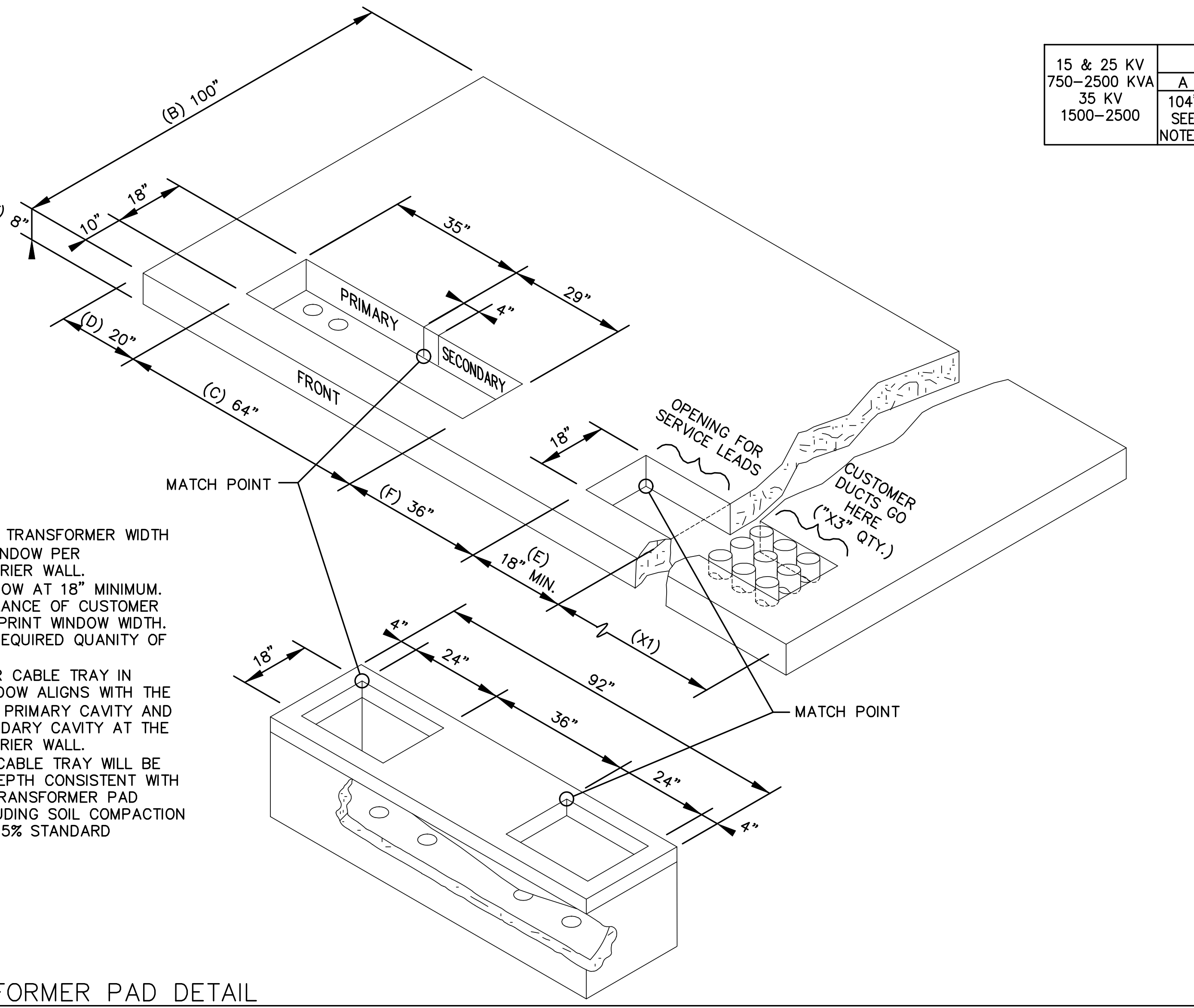
(B) 100"
(T) 8"
10"
18"
35"
29"
4"
PRIMARY
SECONDARY
(D) 20"
FRONT
(C) 64"
OPENING FOR SERVICE LEADS
CUSTOMER DUCTS GO HERE ("X3" QTY.)
18"
MATCH POINT
(F) 36"
(E) 18" MIN.
(X1)
4"
24"
92"
36"
24"
4"
18"
MATCH POINT

PAD NOTES:
1) DIM A IS MAXIMUM TRANSFORMER WIDTH PLACED ON 64" WINDOW PER TRANSFORMER BARRIER WALL.
2) DIM E IS SCC WINDOW AT 18" MINIMUM. DIM X1 IS THE BALANCE OF CUSTOMER CHOSEN SCC FOOTPRINT WINDOW WIDTH. X3 IS CUSTOMER REQUIRED QUANITY OF DUCTS.
3) MATCH POINTS FOR CABLE TRAY IN TRANSFORMER WINDOW ALIGNS WITH THE 4" WALL INTO THE PRIMARY CAVITY AND FLUSH WITH SECONDARY CAVITY AT THE TRANSFORMER BARRIER WALL.
4) TOP SURFACE OF CABLE TRAY WILL BE INSTALLED AT A DEPTH CONSISTENT WITH POUR–IN–PLACE TRANSFORMER PAD FINAL GRADE INCLUDING SOIL COMPACTION REQUIREMENT AT 95% STANDARD PROCTOR.

2 TRANSFORMER PAD DETAIL
E202R.1 N.T.S.
1907–E–TRANS CONC PAD

15 & 25 KV 750–2500 KVA 35 KV 1500–2500	PAD DIMENSIONS (DIM)								REINFORCED STEEL SCHEDULE								
	A	B	C	D	E	F	T	X1	①	②	③	④	⑤	⑥	⑦	⑧	⑨
	104" SEE NOTE 1	100"	64"	20"	18" MIN	36"	8"	BAL OF SCC WIDTH	9–#4	3–#4	3–#4	8–#4	6–#4	2–#4 x3'0"	14–#4	5–#4	#4

REBAR NOTES:
1) REBAR SCHEDULE #8 IS PER CUSTOMER CHOSEN SCC FOOTPRINT WIDTH.
2) REBAR SCHEDULES #1, 2 & 9 (SCC SIDE) IS PER CUSTOMER CHOSEN SCC FOOTPRINT WIDTH.

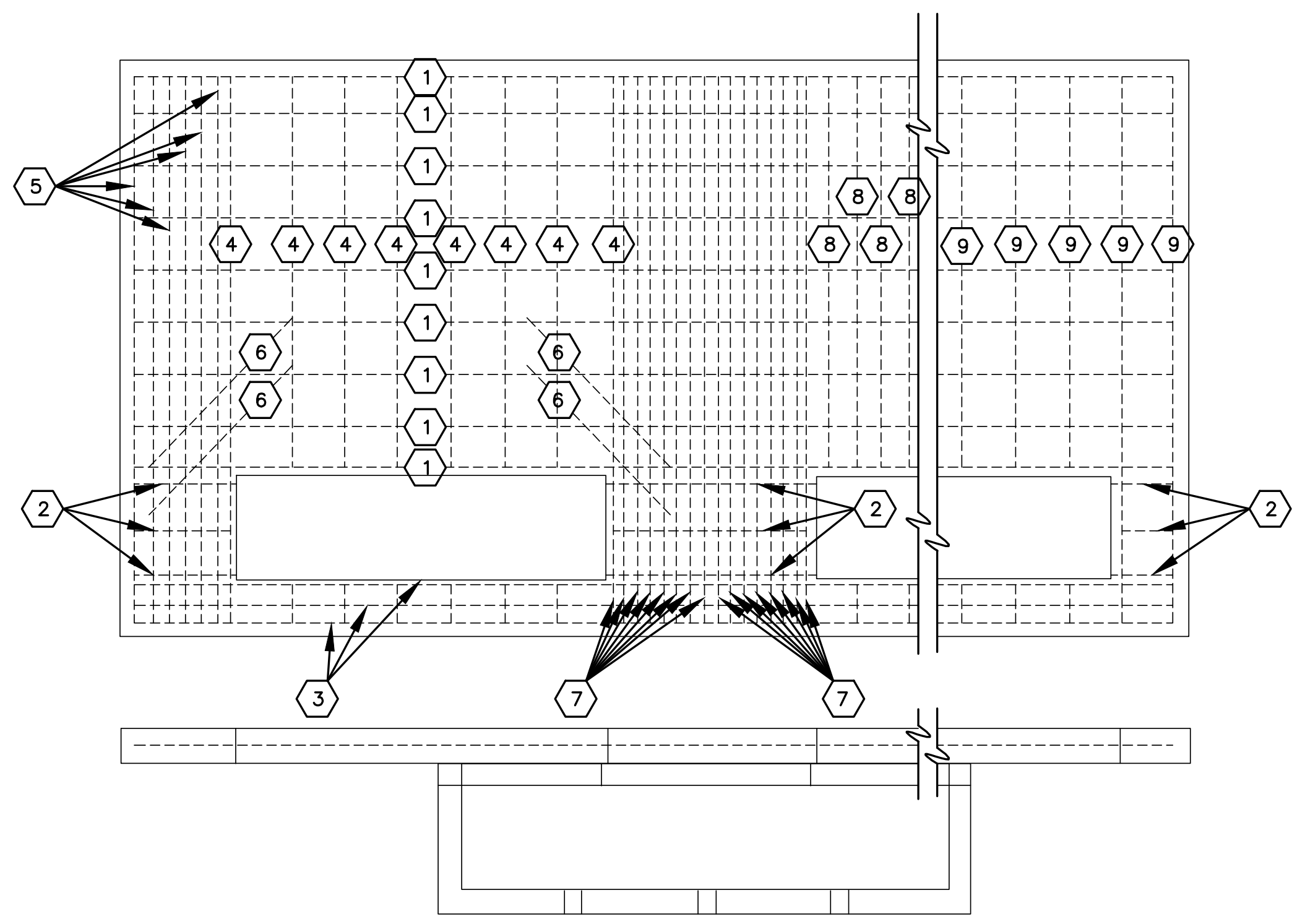

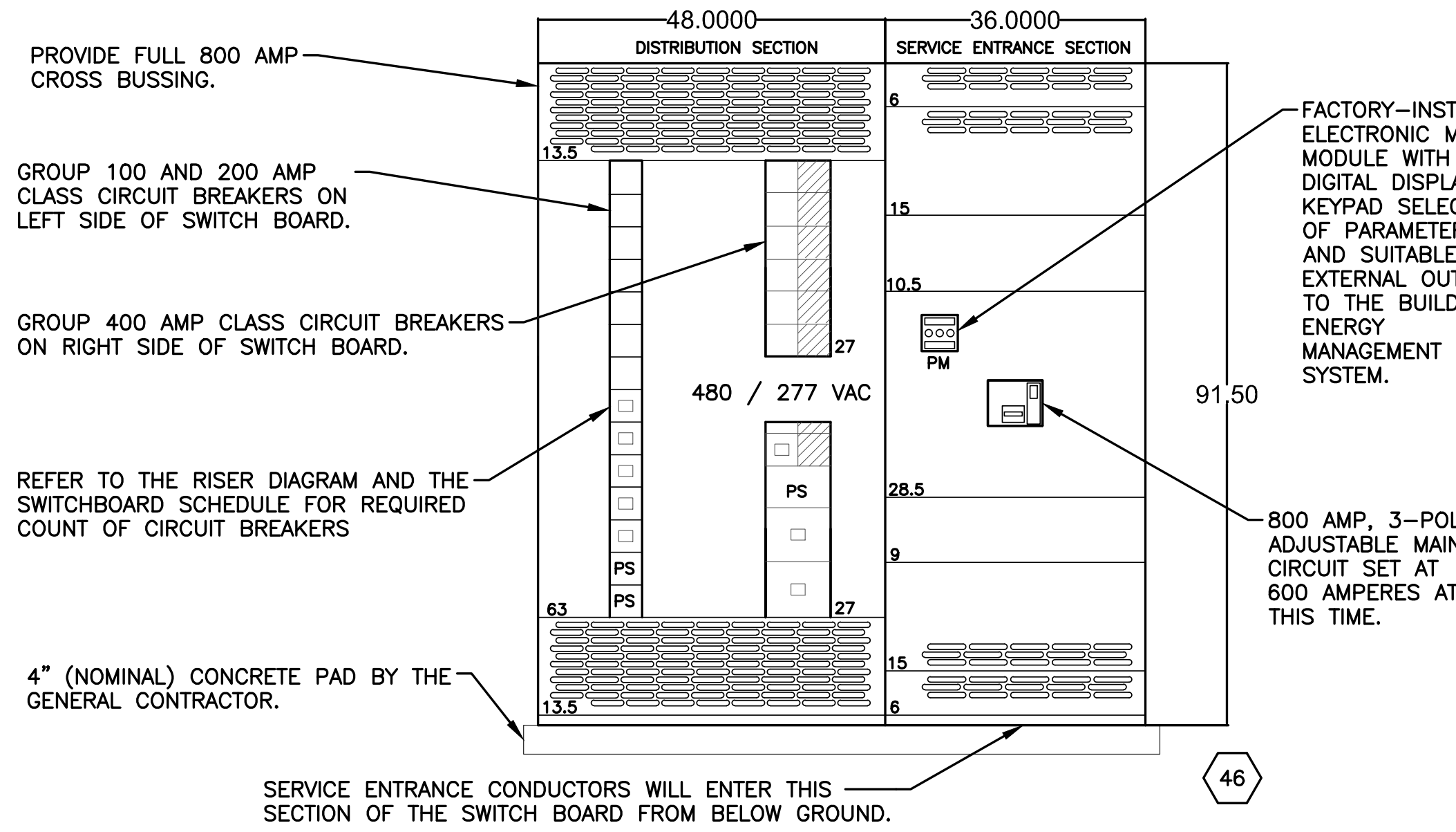
48.0000
DISTRIBUTION SECTION
36.0000
SERVICE ENTRANCE SECTION
PROVIDE FULL 800 AMP CROSS BUSSING.
GROUP 100 AND 200 AMP CLASS CIRCUIT BREAKERS ON LEFT SIDE OF SWITCH BOARD.
GROUP 400 AMP CLASS CIRCUIT BREAKERS ON RIGHT SIDE OF SWITCH BOARD.
REFER TO THE RISER DIAGRAM AND THE SWITCHBOARD SCHEDULE FOR REQUIRED COUNT OF CIRCUIT BREAKERS
4" (NOMINAL) CONCRETE PAD BY THE GENERAL CONTRACTOR.
SERVICE ENTRANCE CONDUCTORS WILL ENTER THIS SECTION OF THE SWITCH BOARD FROM BELOW GROUND.
FACTORY–INSTALLED ELECTRONIC METER MODULE WITH LOCAL DIGITAL DISPLAY, KEYPAD SELECTION OF PARAMETERS, AND SUITABLE FOR EXTERNAL OUTPUT TO THE BUILDING ENERGY MANAGEMENT SYSTEM.
800 AMP, 3–POLE, ADJUSTABLE MAIN CIRCUIT SET AT 600 AMPERES AT THIS TIME.
480 / 277 VAC
PM
PS
13.5
6
15
10.5
27
28.5
9
63
91.50
46

3 SWITCHBOARD DETAIL
E202R.1 N.T.S.
1907–E–SWITCHBOARD

1. Grounding Lug Attachment to Grounding Bar Requires two (2) Bolts per Lug.
2. Provide:

(1) 1/4"x4"x12" in Electrical Room 120

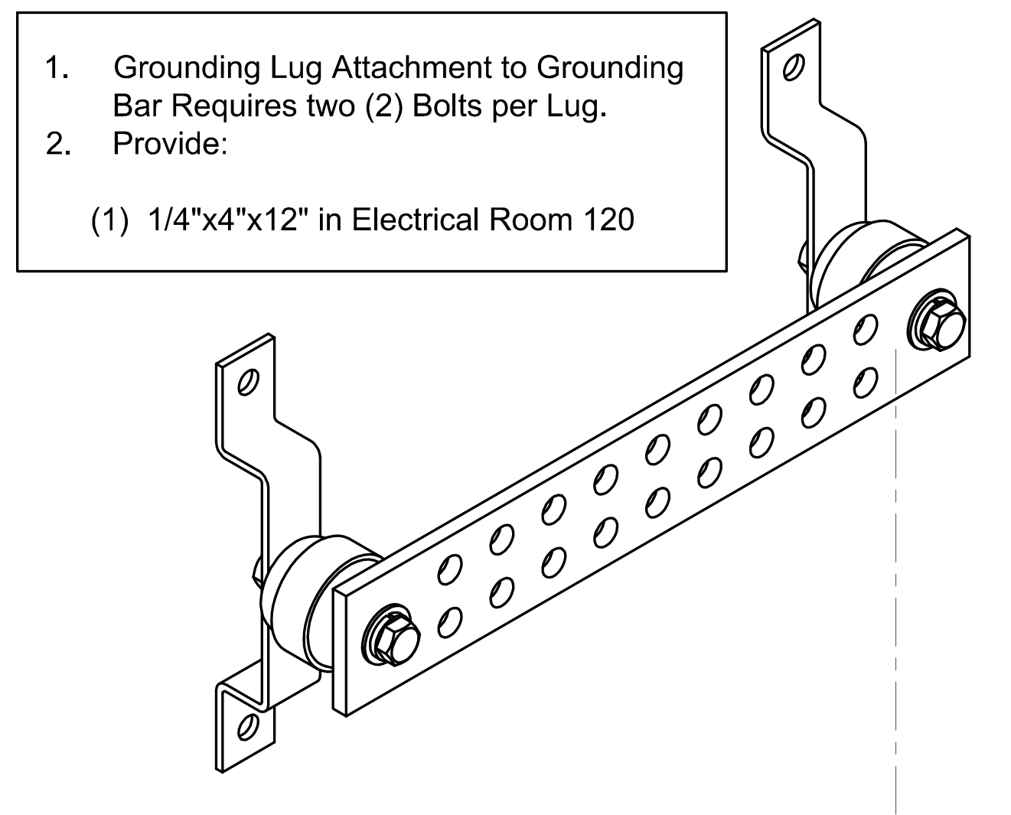

4 GROUND BAR DETAIL
E202R.1 N.T.S.
1907–E–GROUND BAR DTL

KEYED LARGE SCALE PLAN NOTES 1/ E202:

1. ELECRICAL CONTRACTOR SHALL PROVIDE AN XCEL APPROVED CONCRETE PAD FOR SIMULATED UNDERGROUND ELECTRIC SERVICE. REFER TO DETAIL **2/E202**. COORDINATE WITH ELECTRICAL APPRENTICESHIP INSTRUCTOR.
2. LOCATION OF 'FUTURE' OWNER PROVIDED UTILITY TYPE TRANSFORMER, 300 KVA, 480/277VAC, 3-PHASE, 4-WIRE SECONDARY.
3. PROVIDE A 800 AMP., 480VAC, 3-PHASE, 4-WIRE PAD-MOUNTED C/T CABINET.
4. PROVIDE AN EMPTY 4" SCHEDULE 40 PVC CONDUIT TO SIMULATE AN UNDERGROUND ELECTRIC SERVICE.
5. PROVIDE A 4" SCHEDULE 40 PVC CONDUIT WITH 4-#600KCMIL XHHW-2 ALUMINUM CONDUCTORS & 1-#3/0 XHHW-2 (GRD).
6. ~~PROVIDE A SPARE 4" SCHEDULE 40 PVC CONDUIT.~~
7. PROVIDE A 400 AMP., 480/277 VAC, 3-PHASE, 4-WIRE WALL-MOUNTED C/T CABINET APPROVED BY XCEL ENERGY FOR SIMULATED UNDERGROUND ELECTRIC SERVICE.
8. ~~PROVIDE A 800 AMP., 480VAC, 3-PHASE, 4-WIRE SWITCHBOARD AS SPECIFIED. REFER TO DETAIL **3/E202**.~~
9. PROVIDE A 12" LONG GROUND BAR PER DETAIL **4/E202**.
10. PROVIDE A 75 KVA, 480VAC, 3-PHASE, DELTA PRIMARY, 120/208VAC, Y-SECONDARY TRANSFORMER.
11. PROVIDE A 60AMP., 480VAC, 3-POLE WITH NEUTRAL 'ASCO' AUTOMATIC TRANSFER SWITCH TO SIMULATE 'EQUIPMENT' EMERGENCY BRANCH.
12. PROVIDE A 30 AMP., 480VAC, 3-POLE WITH NEUTRAL 'ASCO' AUTOMATIC TRANSFER SWITCH TO SIMULATE 'LIFE-SAFETY' EMERGENCY BRANCH.
13. PROVIDE A 10'-0" SECTION OF 480/277 VAC, 3-PHASE, 4-WIRE SQUARE 'D' ONLY BUSSDUCT.
14. PROVIDE A 30 AMP., FUSIBLE, 480 VAC, 3-POLE, BUSSDUCT DISCONNECT.
15. PROVIDE A 60 AMP., FUSIBLE, 480 VAC, 3-POLE, BUSSDUCT DISCONNECT.
16. LOCATION OF 'FUTURE' OWNER PROVIDED UTILITY TYPE TRANSFORMER, 150 KVA, 120/208VAC, 3-PHASE, 4-WIRE SECONDARY.
17. APPROXIMATE LOCATION OF 'FUTURE' SOLAR SYSTEM CONTROL PANEL(S), EQUIPMENT.
18. PROVIDE AN EMPTY 2" SCHEDULE 40 PVC CONDUIT TO SOLAR SYSTEM PANELS. REFER TO SITE PLAN E001 FOR EXACT LOCATION.
19. PROVIDE A UNISTRUT FRAMING CHANNEL CEILING FOR COMMERCIAL LAB FOR MOUNTING CONDUIT, JUNCTION BOXES, LIGHTING FIXTURES, ETC. TYPICAL.
20. PROVIDE A 200 AMP., 480 VAC, 3-POLE, NON-FUSED, DOUBLE THROW, MANUAL TRANSFER SWITCH.
21. PROVIDE 200 AMP., 480 VAC, 3-PHASE, FEEDER. REFER TO ELECTRIC RISER DIAGRAM **1/E404**.
22. PROVIDE A 200 AMP., 480VAC, 3-POLE, NON-FUSED, HEAVY DUTY, NEMA 1 DISCONNECT SWITCH.
23. PROVIDE A 200 AMP. 480 VAC, 3-PHASE, FEEDER TO EXISTING SWITCHBOARD LOCATED IN ELECTRICAL ROOM #109. REFER TO ELECTRIC RISER DIAGRAM **1/E404**.
24. PROVIDE A 60 AMP., 208 VAC, 3-PHASE FEEDER TO PANELBOARD 'CLD' FOR EMERGENCY TRANSFER SWITCH - EQUIPMENT BRANCH. REFER TO ELECTRIC RISER DIAGRAM **1/E404**.
25. PROVIDE A 30 AMP., 208 VAC, 3-PHASE FEEDER TO PANELBOARD 'CLD' FOR EMERGENCY TRANSFER SWITCH - LIFE SAFETY BRANCH. REFER TO ELECTRIC RISER DIAGRAM **1/E404**.
26. PROVIDE AN EMPTY 1" SCHEDULE 40 PVC CONDUIT TO EMERGENCY GENERATOR PAD AREA. REFER TO SITE PLAN **1/E001** FOR LOCATION.
27. PROVIDE AN EMPTY 3/4" SCHEDULE 40 PVC CONDUIT TO EMERGENCY GENERATOR PAD AREA. REFER TO SITE PLAN **1/E001** FOR LOCATION.
28. INSTALL A WTC (OWNER) PROVIDED VOICE-EVAC TYPE FIRE ALARM CONTROL PANEL AND DEVICES FOR LABS **ONLY**, DO NOT CONNECT TO EXISTING 'NOTIFIER' BUILDING FIRE ALARM SYSTEM. THIS CONTROL PANEL AND DEVICES SHALL SERVE **ONLY** COMMERCIAL ELECTRICAL LAB ROOMS. PROVIDE ALL LOW VOLTAGE WIRING FOR A COMPLETE SYSTEM.
29. LOCATION FOR FIRE ALARM SYSTEM NAC PANELS FOR LABS ONLY. DO NOT CONNECT TO EXISTING 'NOTIFIER' BUILDING FIRE ALARM SYSTEM.
30. WTC FACILITY PLANT (OWNER) SHALL PROVIDE A DOOR ACCESS SYSTEM CONTROL PANEL. ELECTRICAL CONTRACTOR SHALL INSTALL IN THIS APPROXIMATE LOCATION FOR LABS ONLY. DO NOT CONNECT TO EXISTING BUILDING DOOR ACCESS SYSTEM. COORDINATE WITH WTC FACILITY PLANT DEPARTMENT.
31. WTC SHALL PROVIDE DOOR ACCESS SYSTEM POWER SUPPLIES AS REQUIRED AND ELECTRICAL CONTRACTOR SHALL INSTALL ADJACENT TO CONTROL PANEL.
32. PROVIDE A 18U WALL-MOUNTED IT EQUIPMENT RACK AS SPECIFIED. COORDINATE WITH ELECTRICAL APPRENTICESHIP INTSTRUCTOR FOR EXACT LOCATION. STUB AN EMPTY 2" EMT FROM EQUIPMENT RACK TO CABLE TRAY FOR LOW VOLTAGE WIRING PATH. REFER TO DETAIL **2/E404**.
33. PROVIDE A 12" WIDE X 4" DEEP WIRE BASKET CABLE TRAY, COORDINATE INSTALLATION WITH ELECTRICAL APPRENTICESHIP INSTRUCTOR.
34. PROVIDE A 12" X 12 X 8" JUNCTION BOX FOR FIRE ALARM SYSTEM IN ELECTRICAL COMMERCIAL LAB ROOMS ONLY, INSTALL AS DIRECTED BY ELECTRICAL APPRENTICESHIP INSTRUCTOR.
35. PROVIDE 1" EMT 'HOME-RUN' TO FIRE ALARM CONTROL PANEL LOCATED IN ELECTRICAL ROOM #120. PROVIDE LOW VOLTAGE FIRE ALARM SYSTEM WIRING AS REQUIIRED.
36. PROVIDE AN EIGHT RELAY 'WATTSTOPPER' LIGHTING CONTROL PANEL, MODEL LC8, OR EQUAL.
37. CONNECT LIGHTING FIXTURE TO RELAY IN LIGHTING CONTROL PANEL LOCATED IN ELECTRICAL ROOM #120.
38. PROVIDE A 30 KVA, 480 VAC, 3-PHASE, DELTA PRIMARY AND 120/240 VAC, 3-PHASE, 4-WIRE DELTA SECONDARY. PLEASE MAKE SURE TO INCLUDE A B PHASE 'HIGH-LEG' CONFIGURATION FOR THIS TRANSFORMER.
39. PROVIDE A 30 KVA, 480 VAC, 3-PHASE, DELTA PRIMARY AND 120/208 VAC, 3-PHASE, 4-WIRE Y SECONDARY.
40. PROVIDE A HILTI, MODEL #EZD33E FIRE STOP SLEEVE THROUGH WALL. OR EQUAL PRODUCT.
41. PROVIDE A 4" EMT CONDUIT SLEEVE FOR LOW VOLTAGE CABLES. PROVIDE PLASTIC BUSHING ON EACH END OF CONDUIT.
42. PROVIDE A SIZE 0, 480 VAC, 3-POLE, COMBINATION MOTOR STARTER WITH 120 VAC CONTROL COIL AS SPECIFIED, IN ADDITION PROVIDE A REMOTE START/STOP STATION.
43. PROVIDE A 480 VAC, 3-PHASE, VFD MOTOR DRIVE AS SPECIFIED.
44. REINSTALL PREVIOUSLY REMOVED 'RAB' EXTERIOR WALL PACK IN THIS APPROXIMATE LOCATION. REFER TO NOTE #22 ON SHEET **E002**.
45. PROVIDE A DIGITAL PROGRAMMABLE LOW VOLTAGE LIGHT SWITCH COMPATIBLE WITH WATTSTOPPER LIGHTING CONTROL PANEL 'LC8' LOCATED IN ELECTRICAL ROOM #120. PROGRAM AS DIRECTED BY ELECTRICAL APPRENTICESHIP INSTRUCTOR.
46. REFER TO DETAIL **6/E402** FOR ELECTRONIC DOOR ACCESS CONTROL DETAIL.
47. FOR COMMERCIAL LABS #126, #128, #129, #130, #131 & #132 PROVIDE A 1" EMT CONDUIT WITH 'SMART CABLE' TO DOOR ACCESS CONTROL PANEL LOCATED IN ELECTRICAL ROOM #120.

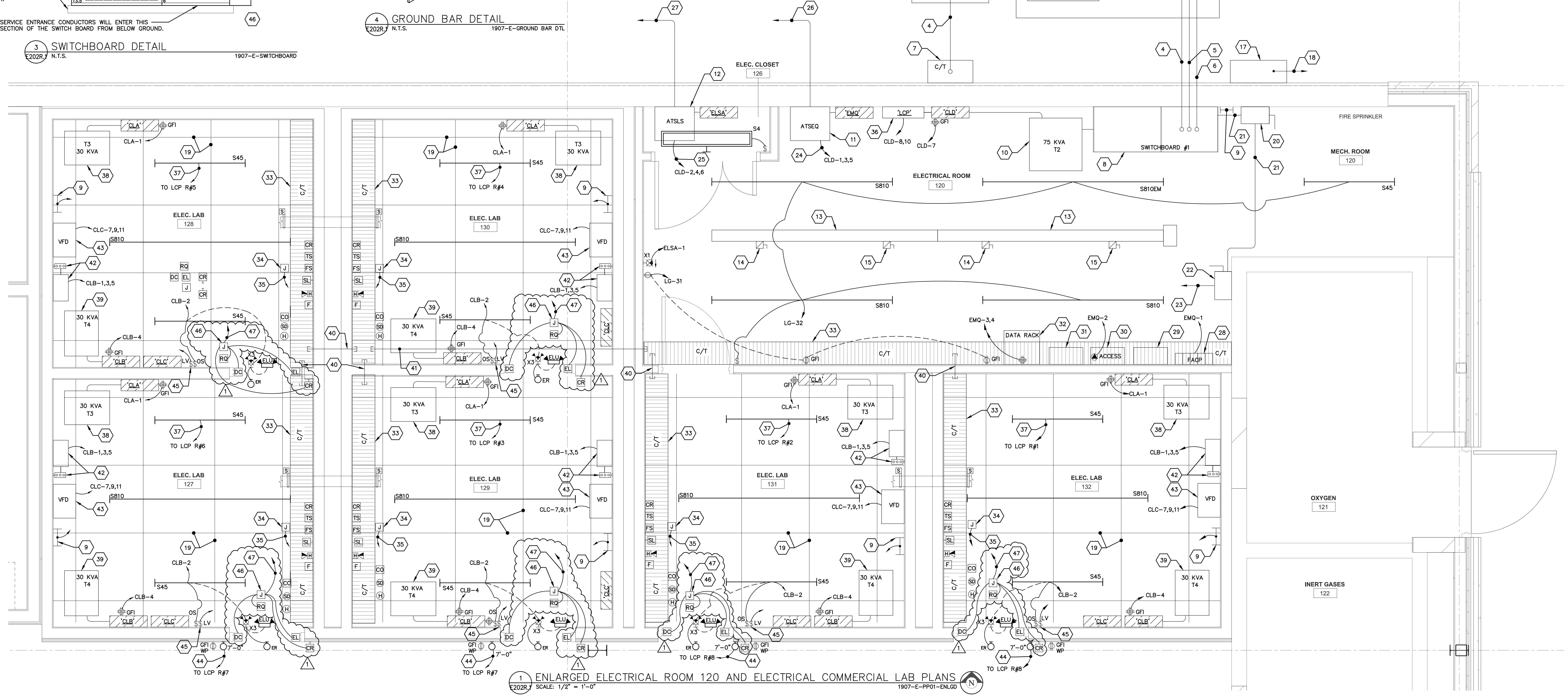
150 KVA T
300 KVA T
C/T
ELEC. CLOSET 126
ATSLS
'ELSA'
S4
ATSEQ
'EMQ'
'LCP'
'CLD'
GFI
CLD–2,4,6
CLD–1,3,5
CLD–8,10
CLD–7
75 KVA T2
SWITCHBOARD #1
FIRE SPRINKLER
MECH. ROOM 120
ELECTRICAL ROOM 120
S810
S810EM
S45
ELSA–1
X1
LG–31
LG–32
DATA RACK
ACCESS
FACP
EMQ–3,4
EMQ–2
EMQ–1
ELEC. LAB 128
ELEC. LAB 130
ELEC. LAB 127
ELEC. LAB 129
ELEC. LAB 131
ELEC. LAB 132
OXYGEN 121
INERT GASES 122
T3 30 KVA
30 KVA T4
VFD
'CLA'
'CLB'
'CLC'
CLA–1
CLB–1,3,5
CLB–2
CLB–4
CLC–7,9,11
TO LCP R#1
TO LCP R#2
TO LCP R#3
TO LCP R#4
TO LCP R#5
TO LCP R#6
TO LCP R#7
TO LCP R#8
CR
TS
FS
SL
H
F
CO
SD
J
RQ
DC
EL
ELU
LV
OS
ER
X3
WP
7'–0"

1 ENLARGED ELECTRICAL ROOM 120 AND ELECTRICAL COMMERCIAL LAB PLANS
E202R.1 SCALE: 1/2" = 1'-0"
1907–E–PP01–ENLGD

ARCHITECTURE
ENGINEERING
INTERIOR DESIGN

HSR ASSOCIATES INC.
100 MILWAUKEE STREET
LA CROSSE, WISCONSIN
PHONE: 608.784.1830
FAX: 608.782.5844
WEB SITE: www.hsrassociates.com

Consultant:

galileo CONSULTING GROUP
2920 EAST AVENUE SOUTH SUITE 102
LA CROSSE, WISCONSIN 54601
PHONE: (608) 787-9106 FAX: (608) 787-8995
E-MAIL: PPopowich@galileo-group.us

Project Title: **WESTERN TECHNICAL COLLEGE APPRENTICESHIP CENTER REMODEL**

Project Location: **2860 21ST PL S LA CROSSE, WI 54601**

Sheet Title: ENLARGED POWER PLAN

HSR Project Number: **19021**

Project Date: **FEBRUARY 2020**

Drawn By: **GALILEO**

Key Plan:

Revisions:

No.	Description	Date
1	ADDENDUM #1	2–10–20
2	ADDENDUM #2	2–25–20

Graphic Scale: **VARIES**

Last Update: **2/25/2020**

E202R.1

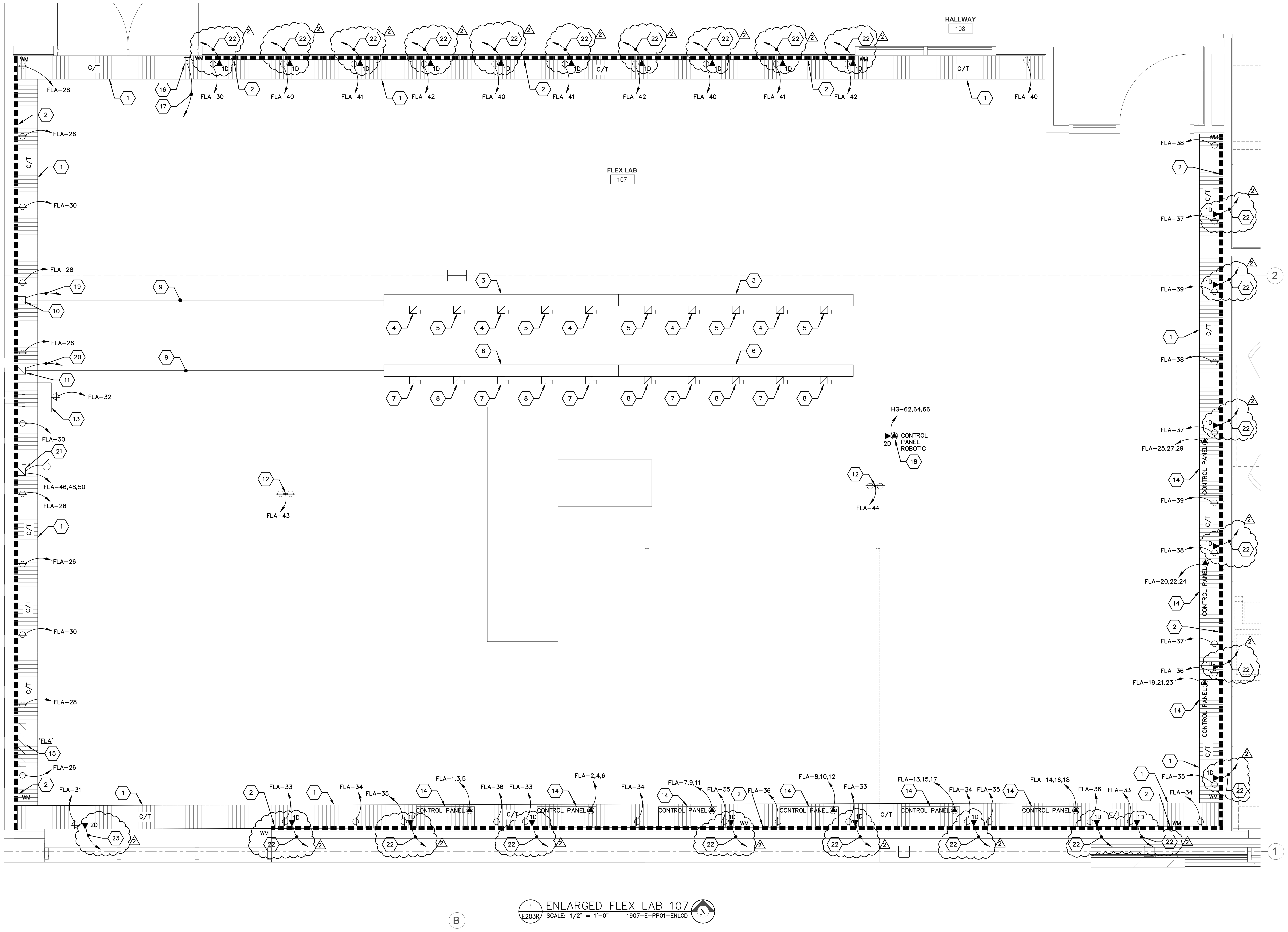
HALLWAY
108
FLEX LAB
107
C/T
WM
FLA–28
FLA–26
FLA–30
FLA–40
FLA–41
FLA–42
FLA–32
FLA–46,48,50
FLA–43
FLA–44
FLA–38
FLA–37
FLA–39
FLA–36
FLA–35
FLA–34
FLA–33
FLA–31
FLA–25,27,29
FLA–20,22,24
FLA–19,21,23
FLA–1,3,5
FLA–2,4,6
FLA–7,9,11
FLA–8,10,12
FLA–13,15,17
FLA–14,16,18
HG–62,64,66
CONTROL PANEL
ROBOTIC
'FLA'
1D
2D

1 ENLARGED FLEX LAB 107
E203R SCALE: 1/2" = 1'-0" 1907–E–PP01–ENLGD

KEYED LARGE SCALE PLAN NOTES E203:

1. PROVIDE A 12" WIDE X 4" DEEP WIRE BASKET CABLE TRAY AS SPECIFIED, COORDINATE INSTALLATION WITH INDUSTRIAL APPRENTICESHIP INSTRUCTOR.
2. PROVIDE WIREMOLD 4000 SERIES SURFACE RACEWAY. SPACE DUPLEX RECEPTACLES APPROXIMATELY 3'-0" ON-CENTER. MOUNT AT 46" A.F.F.
3. PROVIDE A 10'-0" SECTION OF 100 AMP., 480/277 VAC, 3-PHASE, 4-WIRE SQUARE 'D' (ONLY) BUSSDUCT. REFER TO DETAIL **2/E203** FOR EXAMPLE, TOTAL OF TWENTY (20) FEET.
4. PROVIDE A 30 AMP., FUSIBLE, 480 VAC, 3-POLE, BUSSDUCT DISCONNECT, FIVE (5) TOTAL. REFER TO DETAIL **3/E203** FOR EXAMPLE.
5. PROVIDE A 60 AMP., FUSIBLE, 480 VAC, 3-POLE, BUSSDUCT DISCONNECT, FIVE (5) TOTAL. REFER TO DETAIL **3/E203** FOR EXAMPLE.
6. PROVIDE A 10'-0" SECTION OF 100 AMP., 120/208 VAC, 3-PHASE, 4-WIRE BUSSDUCT AS SPECIFIED. REFER TO DETAIL **2/E203** FOR EXAMPLE.
7. PROVIDE A 30 AMP., FUSIBLE, 208 VAC, 3-POLE, BUSSDUCT DISCONNECT, FIVE (5) TOTAL. REFER TO DETAIL **3/E203** FOR EXAMPLE.
8. PROVIDE A 60 AMP., FUSIBLE, 208 VAC, 3-POLE, BUSSDUCT DISCONNECT, FIVE (5) TOTAL. REFER TO DETAIL **3/E203** FOR EXAMPLE.
9. PROVIDE A 100 AMP. FEEDER WITH 4-#3 THWN-2, & 1-#8 THWN-2 (GRD) IN 1-1/4" EMT CONDUIT BETWEEN DISCONNECT ON WALL AND BUSSDUCT.
10. PROVIDE A 100 AMP., 480 VAC, 3-POLE, NON-FUSED, WITH SOLID NEUTRAL, HEAVY DUTY DISCONNECT. LABEL '480V BUSSDUCT'.
11. PROVIDE A 100 AMP., 208 VAC, 3-POLE, NON-FUSED, WITH SOLID NEUTRAL, HEAVY DUTY DISCONNECT. LABEL '208V BUSSDUCT'.
12. PROVIDE A CEILING MOUNTED RETRACTABLE CORD REEL. HUBBELL, MODEL #HBL45123R220W OR EQUAL. CORD REEL INCLUDES TWO (2) 20 AMP., DUPLEX RECEPTACLES.
13. PROVIDE A 18U WALL-MOUNTED IT EQUIPMENT RACK AS SPECIFIED. COORDINATE WITH INDUSTRIAL APPRENTICESHIP INTSTRUCTOR FOR EXACT LOCATION. STUB AN EMPTY 2" EMT FROM EQUIPMENT RACK TO CABLE TRAY FOR LOW VOLTAGE WIRING PATH. REFER TO DETAIL **2/E404**.
14. PROVIDE A 30" WIDE X 36" HIGH X 12" DEEP 'HOFFMAN' CABINET WITH LOCKABLE COVER AND SOLID BACKPLATE. INSTALL AN EMPTY 2" EMT CONDUIT TO CABLE TRAY LOCATED ABOVE FOR LOW VOLTAGE WIRING PATH. PROVIDE PLASTIC BUSHING ON END OF CONDUIT. TOTAL OF NINE (9) REQUIRED FOR THIS PROJECT. PROVIDE A 30 AMP., 120/208 VAC, 3-PHASE, 4-WIRE BRANCH-CIRCUIT WITH #10 THWN-2 EQUIPMENT GROUND. 2
15. PROVIDE A 125 AMP., 120/208 VAC, 3-PHASE, 4-WIRE, PANELBOARD WITH 125 AMP MAIN CIRCUIT BREAKER WITH 120 VAC SHUNT TRIP. REFER TO PANELBOARD SCHEDULE. REFER TO ELECTRIC RISER DIAGRAM **1/E404**.
16. PROVIDE A 20 AMP., 120VAC, 'EMERGENCY' MUSHROOM TYPE SINGLE-POLE SHUT-OFF SWITCH AS SPECIFIED WITH ENGRAVED COVER. REFER TO DETAIL **4/E404** FOR EXAMPLE.
17. PROVIDE A 120 VAC CONTROL CIRCUIT TO ENERGIZE MAIN SHUNT TRIP CIRCUIT BREAKER IN PANELBOARD 'FLA' FOR EMERGENCY SHUT-OFF.
18. MAKE FINAL CONNECTION TO 30 AMP., 480 VAC, 3-PHASE, 'ROBOTIC' EQUIPMENT. COORDINATE WITH INDUSTRIAL APPRENTICESHIP INSTRUCTOR. PROVIDE A 30 AMP., 480 VAC, 4-WIRE, 3-POLE WITH GROUND TWIST LOCK RECEPTACLE SUSPENDED FROM CEILING, NEMA L16-30. PROVIDE A MATCHING SO CORD AND TWIST LOCK PLUG AND CONNECT TO EQUIPMENT. REFER TO PHOTOS **#7/E404**, **#8/E404** AND **#9/E404** FOR EXAMPLE OF INSTALLATION. CONNECT TO EXISTING PANELBOARD 'HG' LOCATED IN ELECTRICAL ROOM #109. PROVIDE A 30/3 CIRCUIT BREAKER IN PANELBOARD 'HG'.
19. PROVIDE A 100 AMP., 480/277 VAC, 3-PHASE, 4-WIRE FEEDER TO EXISTING SQUARE 'D' SWITCHBOARD LOCATED IN ELECTRICAL ROOM #109, PROVIDE A 100/3 CIRCUIT BREAKER IN SWITCHBOARD.
20. PROVIDE A 100 AMP., 120/208 VAC, 3-PHASE, 4-WIRE FEEDER TO EXISTING PANELBOARD 'LB1' LOCATED IN ELECTRICAL ROOM #109, PROVIDE A 100/3 CIRCUIT BREAKER IN PANELBOARD.
21. PROVIDE A 30 AMP., 250 VAC, 3-POLE, NON-FUSED, NEMA 1 DISCONNECT FOR 5HP AIR COMPRESSOR.
22. PROVIDE ONE (1) CAT6 CABLE TO IT EQUIPMENT RACK LOCATED IN ELECTRICAL ROOM #109 AND TERMINATE BOTH ENDS.
23. PROVIDE TWO (2) CAT6 CABLES TO IT EQUIPMENT RACK LOCATED IN ELECTRICAL ROOM #109 AND TERMINATE BOTH ENDS. 2

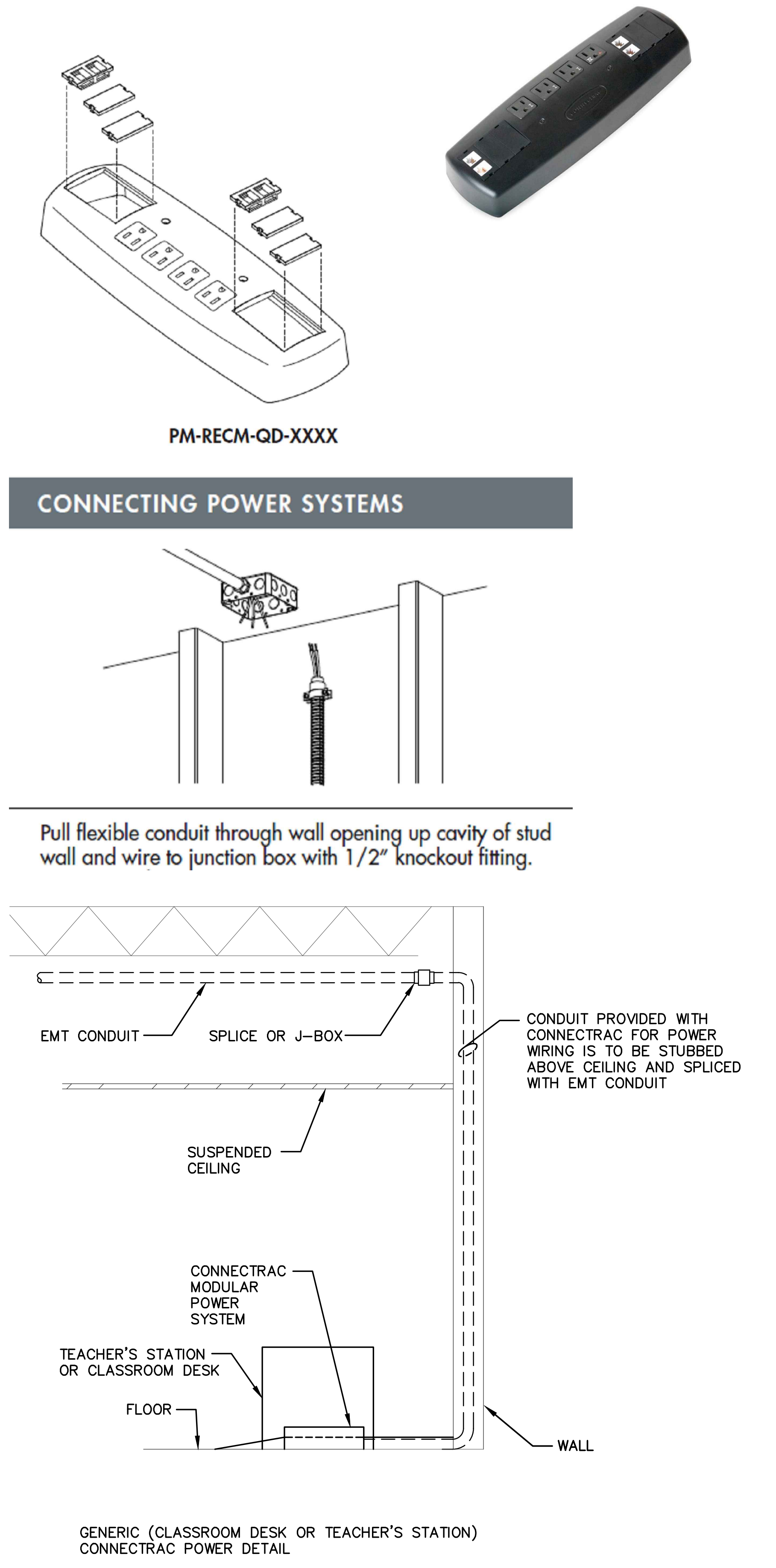
PM-RECM-QD-XXXX
CONNECTING POWER SYSTEMS
EMT CONDUIT
SPLICE OR J–BOX
CONDUIT PROVIDED WITH CONNECTRAC FOR POWER WIRING IS TO BE STUBBED ABOVE CEILING AND SPLICED WITH EMT CONDUIT
SUSPENDED CEILING
CONNECTRAC MODULAR POWER SYSTEM
TEACHER'S STATION OR CLASSROOM DESK
FLOOR
WALL

Pull flexible conduit through wall opening up cavity of stud wall and wire to junction box with 1/2" knockout fitting.

GENERIC (CLASSROOM DESK OR TEACHER'S STATION)
CONNECTRAC POWER DETAIL

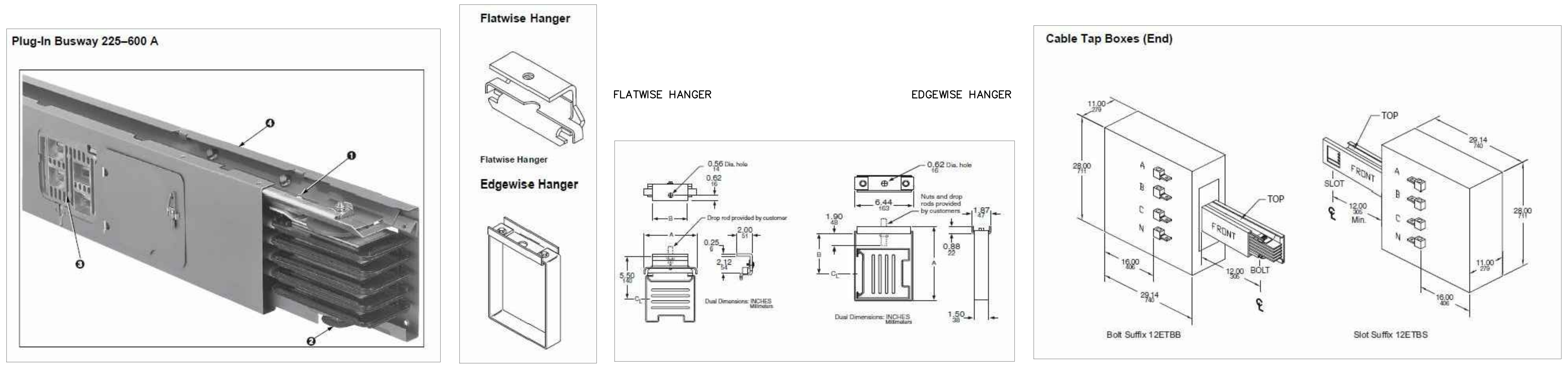
Plug-In Busway 225–600 A
Flatwise Hanger
FLATWISE HANGER
EDGEWISE HANGER
Flatwise Hanger
Edgewise Hanger
Dual Dimensions: INCHES Millimeters
Cable Tap Boxes (End)
TOP
FRONT
BOLT
SLOT
Bolt Suffix 12ETBB
Slot Suffix 12ETBS

2 100A PLUG IN BUSS DETAILS – EXAMPLE ONLY
E203R SCALE: N.T.S. 1326–E–400A BUSS DTL, 1326–E–400A HNG DTL, 1326–E–400A HNG DTL2, AND 1326–E–400A TAPBOX END DTL

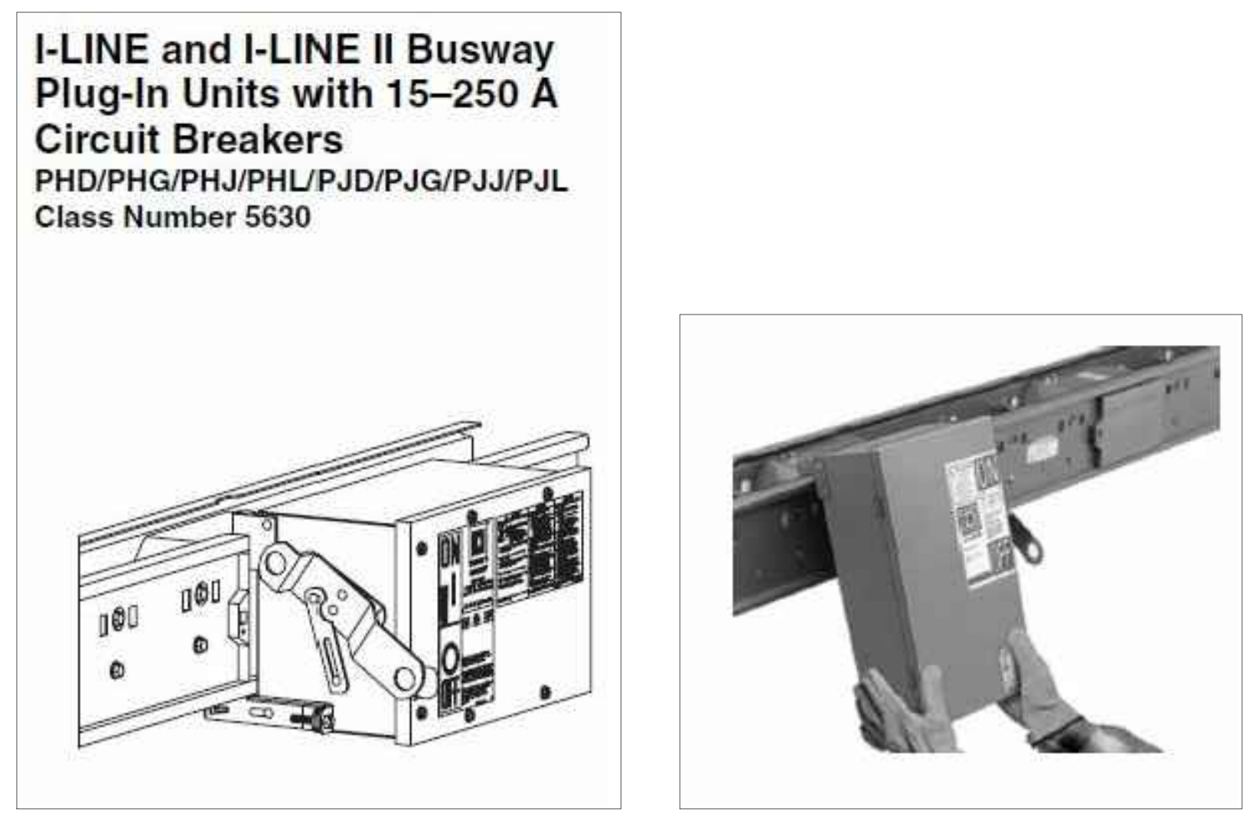
I-LINE and I-LINE II Busway Plug-In Units with 15–250 A Circuit Breakers
PHD/PHG/PHJ/PHL/PJD/PJG/PJJ/PJL
Class Number 5630

3 CIRCUIT BREAKER BUSS MOUNTING DETAIL
E203R SCALE: N.T.S. 1326–E–60A CB MNT DTL AND 1326–E–60A CB MNT DTL3

4 CONNECTRAC DETAILS
E203R N.T.S. 1907–E–CONECTRAC DTL

ARCHITECTURE
ENGINEERING
INTERIOR DESIGN

HSR ASSOCIATES INC.
100 MILWAUKEE STREET
LA CROSSE, WISCONSIN
PHONE: 608.784.1830
FAX: 608.782.5844
WEB SITE: www.hsrassociates.com

Consultant:

galileo CONSULTING GROUP
2920 EAST AVENUE SOUTH SUITE 102
LA CROSSE, WISCONSIN 54601
PHONE: (608) 787-9106 FAX: (608) 787-8995
E-MAIL: PPopowich@galileo-group.us

Project Title: **WESTERN TECHNICAL COLLEGE APPRENTICESHIP CENTER REMODEL**

Project Location: **2860 21ST PL S**
LA CROSSE, WI 54601

Sheet Title: ENLARGED POWER PLAN

HSR Project Number: **19021**

Project Date: **FEBRUARY 2020**

Drawn By: **GALILEO**

Key Plan:

Revisions:

No.	Description	Date
2	ADDENDUM #2	2–25–20

Graphic Scale: **VARIES**

Last Update: **2/25/2020**

E203R

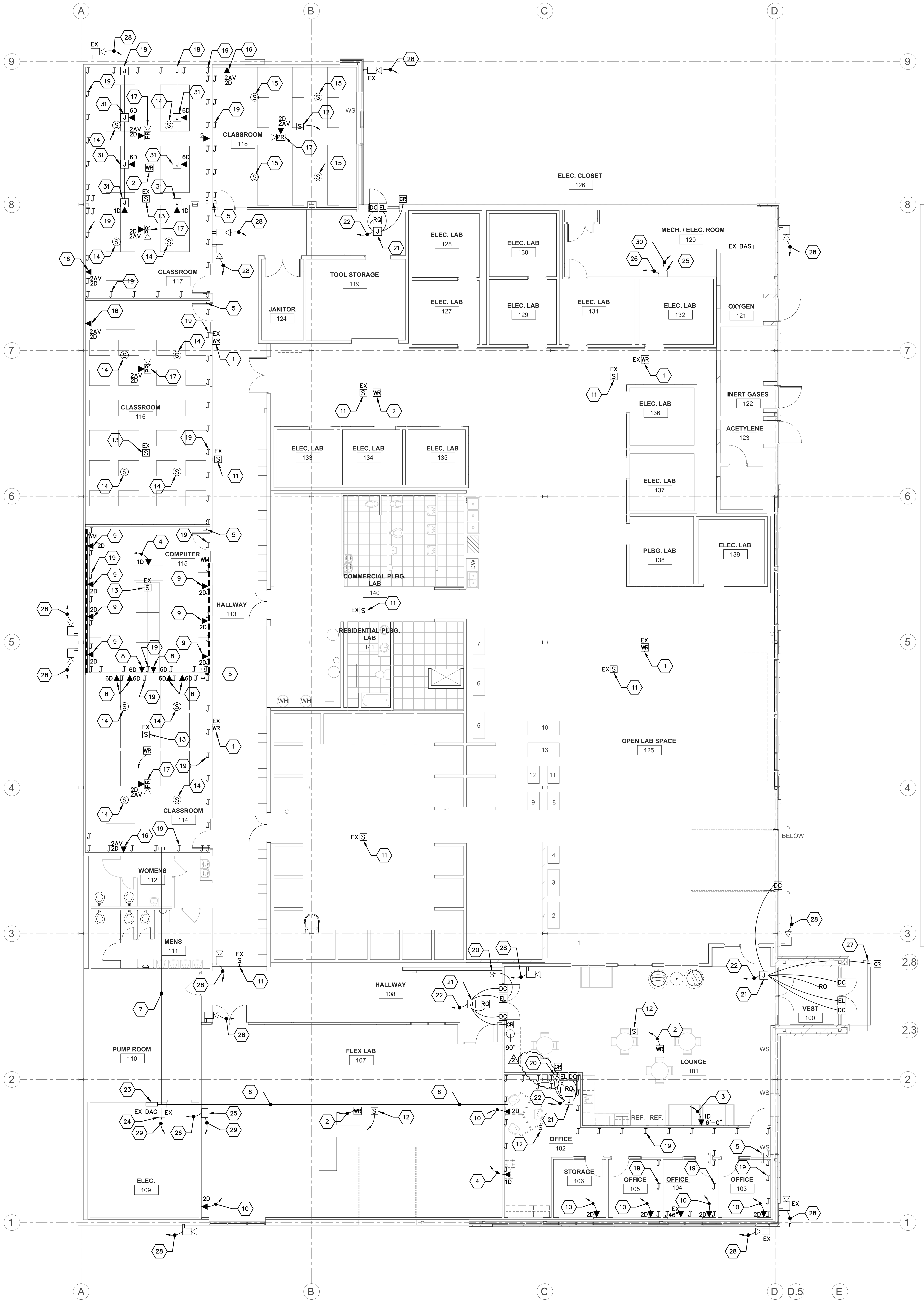

1 E301R LOW VOLTAGE PLAN
SCALE: 1/8" = 1'-0"
1907-E-LV01

KEYED LOW VOLTAGE SYSTEMS NOTES E301:

GENERAL NOTES:

A. FOR ALL TELECOMMUNICATIONS OUTLETS - DATA JACKS AND CABLING WILL BE DESIGNATED ON THIS PLAN AS FOLLOWS:
  a. NETWORKING (DATA) = ORANGE DATA JACKS WITH BLUE CAT 6 CABLES.
  b. PHONE (PH) = ORANGE DATA JACKS WITH BLUE CAT 6 CABLES.
  c. AUDIO/VIDEO (A/V) - GREEN DATA JACKS WITH GREEN CAT 6 CABLE. ONLY ONE SET OF A/V CABLES NEEDED FOR PROJECTORS AND MONITORS. FOR AN EXAMPLE, REFER TO **5/E403**.
  d. SECURITY CAMERAS (CAM) - WHITE JACKS WITH WHITE CAT 6 CABLES.
  e. DOOR ACCESS - YELLOW SMART CABLE
  f. FAX/ANALOG (ANA) - PURPLE JACKS WITH PURPLE CAT 6 CABLES.
  g. THE ELECTRICAL CONTRACTOR IS RESPONSIBLE TO PROVIDE 'J' HOOKS, AND CONDUIT SLEEVES THROUGH WALLS FOR LOW VOLTAGE CABLE ROUTING AS REQUIRED.

B. ALL LOW VOLTAGE WIRING SHALL BE '**PLENUM**' RATED.

C. ELECTRICAL CONTRACTOR SHALL PROVIDE AND INSTALL 'J-HOOK' TYPE LOW VOLTAGE CABLE WIRING SUPPORT ON 4'-0" CENTERS ABOVE SUSPENDED ACOUSTIC CEILINGS BETWEEN CONDUIT WALL STUBS AND CABLE TRAY. ALL LOW VOLTAGE WIRING SHALL BE INDEPENTANTLY SUPPORTED SEPARATE FROM GRID TYPE CEILING, NO EXCEPTIONS.

D. ELECTRICAL CONTRACTOR IS RESPONSIBLE TO PROVIDE ALL LOW VOLTAGE WIRING AND DATA JACKS, ETC. FOR A COMPLETE SYSTEM FOR THIS PROJECT IN BID.

KEYED NOTES: ⬡

1. APPROXIMATE LOCATION OF EXISTING WIRELSS ACCESS POINT. ELECTRICAL CONTRACTOR SHALL PROVIDE ONE (1) CAT 6A CABLE BETWEEN WIRELESS ACCESS POINT AND IT EQUIPMENT RACK LOCATED IN ELECTRICAL ROOM **#109**. REUSE EXSTING JUNCTION BOX AND CONDUIT TO THE EXTENT POSSIBLE.
2. APPROXIMATE LOCATION OF WIRELESS ACCESS POINT PROVIDED BY WTC IT DEPARTMENT, INSTALLED BY ELECTRICAL CONTRACTOR. ELECTRICAL CONTRACTOR SHALL PROVIDE ONE (1) CAT 6A CABLE BETWEEN WIRELESS ACCESS POINT AND IT EQUIPMENT RACK LOCATED IN ELECTRICAL ROOM **#109**. PROVIDE JUNCTION BOX AND CONDUIT AS REQUIRED.
3. ELECTRICAL CONTRACTOR SHALL PROVIDE AND INSTALL ONE (1) CAT 6 CABLE BETWEEN SINGLE-PORT DATA JACK AND ELECTRICAL ROOM **#109** FOR INFORMATION MONITOR. PROVIDE A DOUBLE GANG JUNCTION BOX WITH A SINGLE GANG MUDRING AND MOUNT BEHIND MONITOR SCREEN. STUB AN EMPTY 3/4" EMT CONDUIT TO 'J' HOOKS ABOVE SUSPENDED CEILING IN OFFICE SPACE #102. VERIFY MOUNTING HEIGHT WITH WTC IT DEPARTMENT PRIOR TO ROUGH-IN.
4. ELECTRICAL CONTRACTOR SHALL PROVIDE AND INSTALL A ONE (1) PORT DATA JACK AT THIS APPROXIMATE LOCATION AND SHALL PROVIDE ONE (1) CAT 6 CABLE BETWEEN DATA JACK AND IT EQUIPMENT RACK LOCATED IN ELECTRICAL ROOM **#109**.
5. ELECTRICAL CONTRACTOR SHALL PROVIDE AND INSTALL A 2" EMT CONDUIT SLEEVE THROUGH WALL, LENGTH SHALL BE APPROXIMATELY 12", INSTALL ABOVE SUSPENDED CEILING FOR LOW VOLTAGE WIRING PATH. FIRE CAULK AS REQUIRED. PROVIDE PLASTIC BUSHINGS ON BOTH ENDS OF SLEEVE.
6. ELECTRICAL CONTRACTOR SHALL PROVIDE AND INSTALL A 2" EMT CONDUIT BETWEEN EXISTING IT EQUIPMENT RACK LOCATED IN ELECTRICAL ROOM #109 AND OFFICE AREA #102 FOR LOW VOLTAGE WIRING. PROVIDE PLASTIC BUSHING ON EACH END OF CONDUIT.
7. ELECTRICAL CONTRACTOR SHALL PROVIDE AND INSTALL A 4" EMT CONDUIT BETWEEN EXISTING IT EQUIPMENT RACK LOCATED IN ELECTRICAL ROOM #109 AND CLASSROOM #114 FOR LOW VOLTAGE WIRING. PROVIDE PLASTIC BUSHING ON EACH END OF CONDUIT.
8. ELECTRICAL CONTRACTOR SHALL PROVIDE AND INSTALL A SIX (6) PORT DATA JACK AT THIS APPROXIMATE LOCATION AND SHALL PROVIDE SIX (6) CAT 6 CABLES BETWEEN DATA JACKS AND IT EQUIPMENT RACK LOCATED IN ELECTRICAL ROOM **#109**. PROVIDE TWO (2) 1" EMT CONDUIT STUBS FROM EACH JUNCTION BOX TO ABOVE SUSPENDED CEILING, PROVIDE PLASTIC BUSHINGS ON CONDUIT ENDS. REFER TO DETAIL **5/E402**.
9. ELECTRICAL CONTRACTOR SHALL PROVIDE AND INSTALL A TWO (2) PORT DATA JACK AT THIS APPROXIMATE LOCATION INSTALLED IN WIREMOLD 4000 SURFACE RACEWAY. ELECTRICAL CONTRACTOR SHALL PROVIDE TWO (2) CAT 6 CABLES BETWEEN DATA JACKS AND IT EQUIPMENT RACK LOCATED IN ELECTRICAL ROOM **#109**.
10. ELECTRICAL CONTRACTOR SHALL PROVIDE AND INSTALL TWO (2) CAT 6 CABLES BETWEEN TWO-PORT DATA JACK AND ELECTRICAL ROOM **#109**. PROVIDE A DOUBLE GANG JUNCTION BOX WITH A SINGLE GANG MUDRING. STUB A 3/4" EMT CONDUIT TO 'J' HOOKS ABOVE SUSPENDED CEILING. VERIFY MOUNTING HEIGHT WITH WTC IT DEPARTMENT PRIOR TO ROUGH-IN. REFER TO DETAIL **5/E402**.
11. EXISTING PUBLIC ADDRESS SYSTEM SOUND SPEAKER TO REMAIN AS IS.
12. ELECTRICAL CONTRACTOR SHALL INSTALL A NEW PUBLIC ADDRESS SPEAKER IN THIS LOCATION. SPEAKER SHALL BE PROVIDED BY WTC IT DEPARTMENT, INSTALLED BY ELECTRICAL CONTRACTOR. PROVIDE 18/2 SHIELDED, PLENUM RATED LOW VOLTAGE WIRING TO PA HEAD-END EQUIPMENT LOCATED IN ELECTRICAL ROOM **#109** AS REQUIRED. COORDINATE WTC IT DEPARTMENT.
13. REINSTALL A PREVIOUSLY REMOVED PUBLIC ADDRESS SPEAKER IN THIS APPROXIMATE LOCATION, A NEW ACOUSTIC CEILING INSTALLED. PROVIDE JUNCTION BOXES, ACOUSTIC TILE SUPPORT BRACKETS, ETC. AS REQUIRED.
14. REINSTALL A PREVIOUSLY REMOVED AV SOUND SPEAKER IN NEW ACOUSTIC CEILING. PROVIDE 18/2 SHIELDED PLENUM RATED LOW VOLTAGE WIRING AS REQUIRED. COORDINATE WITH WTC IT DEPARTMENT.
15. INSTALL A NEW AV SOUND SPEAKER IN NEW ACOUSTIC CEILING. REUSE EXISTING LOW VOLTAGE WIRING TO THE EXTENT POSSIBLE. EXTEND EXISTING LOW VOLTAGE WIRING AND/OR PROVIDE NEW LOW VOLTAGE WIRING AS REQUIRED. COORDINATE WITH WTC IT DEPARTMENT.
16. ELECTRICAL CONTRACTOR SHALL PROVIDE AND INSTALL A FOUR (4) PORT DATA JACK AT THIS APPROXIMATE LOCATION FOR TEACHER'S STATION. PROVIDE TWO (2) CAT 6 CABLES TO IT EQUIPMENT RACK LOCATED IN ELECTRICAL ROOM **#109**. PROVIDE TWO (2) CAT6A AV CABLES TO THE JUNCTION-BOX AT CEILING MOUNTED PROJECTOR / MONITOR. ELECTRICAL CONTRACTOR IS RESPONSIBLE TO PROVIDE A DOUBLE GANG JUNCTION BOX AND ONE (1) 1" CONDUIT STUBBED ABOVE SUSPENDED CEILING FOR DATA AND A/V WIRING. REFER TO DETAIL **5/E402**.
17. ELECTRICAL CONTRACTOR SHALL PROVIDE AND INSTALL A FOUR (4) PORT DATA JACK AT THIS APPROXIMATE LOCATION FOR OVERHEAD PROJECTOR. PROVIDE TWO (2) CAT 6 CABLES TO IT EQUIPMENT RACK LOCATED IN ELECTRICAL ROOM **#109**. PROVIDE TWO (2) CAT6 AV CABLES TO THE JUNCTION-BOX AT TEACHER'S STATION. ELECTRICAL CONTRACTOR IS RESPONSIBLE TO PROVIDE A DOUBLE GANG JUNCTION BOX AS REQUIRED FOR DATA AND A/V WIRING. COORDINATE WITH WTC IT DEPARTMENT.
18. ELECTRICAL CONTRACTOR SHALL PROVIDE AND INSTALL A 'CONNECT TRAC' FLOOR SYSTEM. PROVIDE SURFACE MOUNTED COMBINATION POWER AND LOW VOLTAGE MODULES AND SURFACE RACEWAY UNDER TABLES. PROVIDE MODULES WITH COMBINATION DUPLEX RECEPTACLES AND DATA JACKS AS NOTED ON DRAWINGS AND AS REQUIRED FOR FURNITURE. REFER TO DETAIL **4/E203** FOR MANUFACTURER MODEL NUMBER EXAMPLES, CONTACT CONNECTRAC SALES REP FOR EXACT MODEL NUMBERS. COORDINATE THOROUGHLY WITH WTC FACILITY PLANT DEPARTMENT AND FURNITURE VENDOR. THE INTENT IS TO SURFACE MOUNT CONNECTRAC ON EXISTING CONCRETE FLOOR AND PROVIDE POWER AND LOW VOLTAGE CABLES BETWEEN THE WALL TO A FLOOR MOUNTED COMBINATION POWER/LOW VOLTAGE MODULES LOCATED BELOW TABLES.
19. ELECTRICAL CONTRACTOR SHALL PROVIDE 'J' HOOKS ABOVE SUSPENDED CEILING SPACED APPROXIMATELY 4'-0" ON-CENTER. TYPICAL
20. ELECTRICAL CONTRACTOR SHALL PROVIE AN 'OVER-RIDE' SWITCH FOR ELECTRONIC DOOR ACCESS SYSTEM, COORDINATE WITH WTC FACILITY PLANT DEPARTMENT.
21. REFER TO DETAIL **6/E402** FOR ELECTRONIC DOOR ACCESS CONTROL DETAIL.
22. ELECTRICAL CONTRACTOR SHALL PROVIDE A 1" EMT CONDUIT HOMERUN TO EXISTING ELECTRONIC DOOR ACCESS CONTROL PANEL LOCATED IN ELECTRICAL ROOM #109 FOR DOOR ACCESS CONTROL 'SMART' CABLE PATH. SMART CABLE SHALL BE: BELDEN, MODEL #658AFJ OR EQUAL, 16 CONDUCTOR, 4 ELEMENT ACCESS CONTROL CABLE, 18-04 +22-3P + 22-02 + 22-04 PLENUM YELLOW COLOR. △2
23. APPROXIMATE LOCATION OF EXISTING ELECTRONIC DOOR ACCESS CONTROL PANEL. REFER TO PHOTO **#14/E501**.
24. APPROXIMATE LOCATION OF NEW IT EQUIPMENT RACK PROVIDED AND INSTALLED BY ELECTRICAL CONTRACTOR. REFER TO DETAIL **3/E404**. NEW IT EQUIPMENT RACK SHALL REPLACE EXISTING PREVIOUSLY REMOVED, REFER TO PHOTO **#13/E501** OF EXISTING.
25. ELECTRICAL CONTRACTOR SHALL PROVIDE AN 18U WALL-MOUNTED EQUIPMENT RACK AND INSTALL IN THIS APPROXIMATE LOCATION. REFER TO DETAIL **2/E404**.
26. ELECTRICAL CONTRACTOR SHALL PROVIDE ONE (1) 12 STRAND SINGLE MODE FIBER OPTIC CABLE AS SPECIFIED AND CONNECT TO IT EQUIPMENT RACK LOCATED IN ELECTRICAL ROOM #109 AND TERMINATE BOTH ENDS.
27. INSTALL ELECTRONIC DOOR ACCESS CONTROL CARD READER AND HARD-WIRED MOTORIZED DOOR OPENER SWITCH IN PEDESTAL. PEDESTAL PROVIDED AND INSTALLED BY GENERAL CONTRACTOR. REFER TO PHOTO **#1/E301** FOR EXAMPLE.
28. ELECTRICAL CONTRACTOR SHALL INSTALL A SECURITY IP CCTV CAMERA PROVIDED BY WTC IT DEPARTMENT IN THIS LOCATION. REUSE EXISTING JUNCTION BOX AND CONDUIT TO THE EXTENT POSSIBLE. PROVIDE A NEW BACKBOX PROVIDED BY WTC IT DEPARTMENT. PROVIDE ONE (1) CAT 6 CABLE TO EQUIPMENT RACK LOCATED IN ELECTRICAL ROOM #109. MOUNTING HEIGHTS SHALL MATCH PREVIOUSLY REMOVED CCTV CAMERAS. COORDINATE WITH WTC IT DEPARTMENT.
29. PROVIDE A #4 BARE STRANDED COPPER CONDUCTOR TO SWITCHBOARD GROUND BAR LOCATED IN ELECTRICAL ROOM #109 FOR GROUNDING/BONDING IT EQUIPMENT RACK.
30. PROVIDE A #4 BARE STRANDED COPPER CONDUCTOR TO SWITCHBOARD GROUND BAR LOCATED IN ELECTRICAL ROOM #120 FOR GROUNDING/BONDING IT EQUIPMENT RACK.

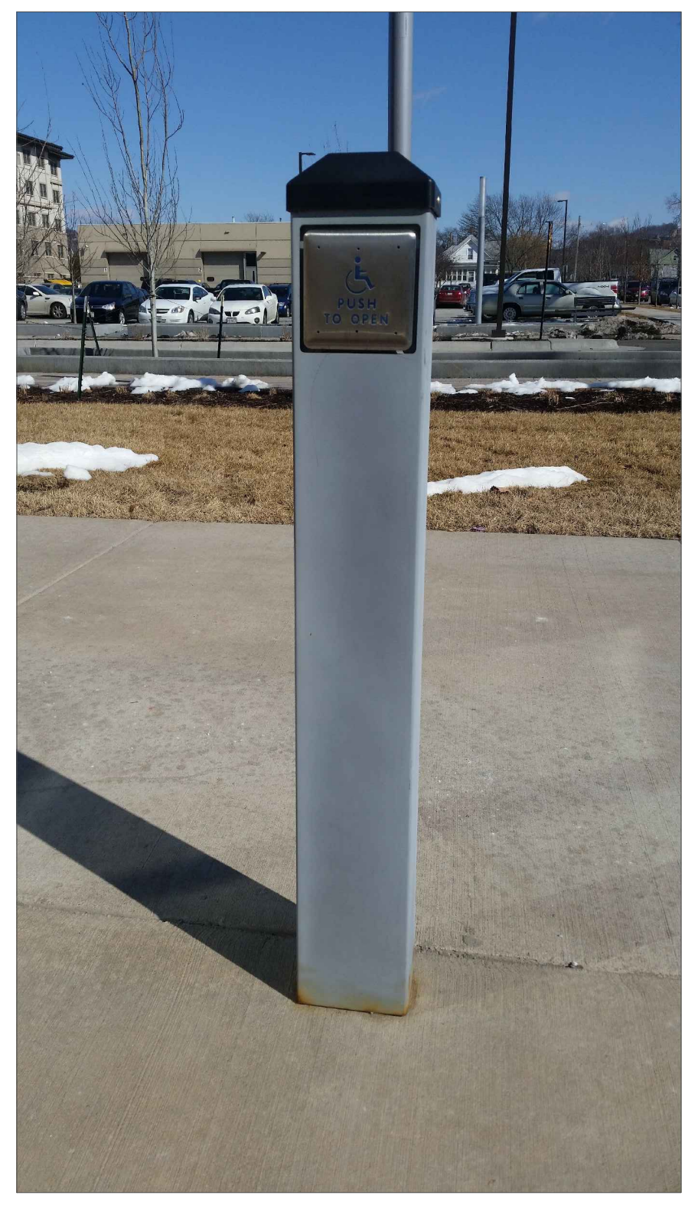

PHOTO #1
144726

ARCHITECTURE
ENGINEERING
INTERIOR DESIGN

HSR ASSOCIATES INC.
100 MILWAUKEE STREET
LA CROSSE, WISCONSIN
PHONE: 608.784.1830
FAX: 608.782.5844
WEB SITE: www.hsrassociates.com

Consultant:

galileo CONSULTING GROUP
2920 EAST AVENUE SOUTH SUITE 102
LA CROSSE, WISCONSIN 54601
PHONE: (608) 787-9106 FAX: (608) 787-8995
E-MAIL: PPopowich@galileo-group.us

Project Title:
WESTERN TECHNICAL COLLEGE
APPRENTICESHIP CENTER REMODEL

Project Location:
2860 21ST PL S
LA CROSSE, WI 54601

Sheet Title:
LOW VOLTAGE PLAN

HSR Project Number:
19021

Project Date:
FEBRUARY 2020

Drawn By:
GALILEO

Key Plan:

Revisions:

No.	Description	Date
2	ADDENDUM #2	2-25-20

Graphic Scale:
VARIES

Last Update:
2/25/2020

E301R

Panel 'LH', 125 Amps., 120/240 VAC, 1-Phase, 3- Wire, M.BRK. (22KAIC)

Space No.	Serves	C/B Size/Type	Load (KVA)		Load (KVA)	C/B Size/Type	Serves	Space No.
1	ELECTRICAL LAB #133	30/2				30/2	ELECTRICAL LAB #136	2
3	"	30/2				30/2	"	4
5	ELECTRICAL LAB #134	30/2				30/2	ELECTRICAL LAB #137	6
7	"	30/2				30/2	"	8
9	ELECTRICAL LAB #135	30/2				30/2	ELECTRICAL LAB #139	10
11	"	30/2				30/2	"	12
13	SPACE						SPACE	14
15	SPACE						SPACE	16
17	SPACE						SPACE	18
19	SPACE						SPACE	20
21	SPACE						SPACE	22
23	SPACE						SPACE	24
25	SPACE						SPACE	26
27	SPACE						SPACE	28
29	SPACE						SPACE	30

NOTES:

1 PROVIDE A 30 SPACE PANELBOARD.

2 SQUARE 'D' ONLY.

TOTAL AMP. :

Panel 'A', 200 Amps., 120/240 VAC, 1-Phase, 3- Wire, M.BRK. (10KAIC)

Space No.	Serves	C/B Size/Type	Load (KVA)		Load (KVA)	C/B Size/Type	Serves	Space No.
1	RANGE RECEPTACLE	40/2				SB	SURGE BREAKER WITH PLUG-ON NEUTRAL	2
3	"	40/2				SB	SURGE BREAKER WITH PLUG-ON NEUTRAL	4
5	ELECTRIC DRYER	30/2				20/1	RECEPTACLE	6
7	"	30/2				20/1	RECEPTACLE	8
9	RECEPTACLE (ARC FAULT)	15/1				15/1	RECEPTACLE (ARC FAULT)	10
11	LIGHTING (ARC FAULT)	15/1				20/1	HEAT/VENT/LIGHT/NIGHT LIGHT (ARC FAULT)	12
13	SMOKE DETECTORS (ARC FAULT)	15/1				20/1	RECEPTACLE (ARC FAULT)	14
15	OUTSIDE RECEPTACLE	20/1				20/1	GFI BREAKER WITH NEUTRAL WIRE PIGTAIL	16
17	SPARE	15/2				20/1	GFI BREAKER WITH PLUG-ON NEUTRAL	18
19	"	15/2				30/2	AIR CONDITIONER DISCONNECT	20
21	SPARE	20/2				30/2	SPARE-GFI	22
23	"	20/2				20/1	SPARE- TANDEM	24
25	SPARE	30/2				20/1	ARC FAULT	26
27	"	30/2				20/1	ARC FAULT	28
29	SPACE					15/1	ARC FAULT	30
31	SPACE						SPACE	32
33	SPACE						SPACE	34
35	SPACE						SPACE	36
37	SPACE						SPACE	38
39	SPACE						SPACE	40

NOTES:

1 PROVIDE A 40 SPACE LOAD CENTER.
2 INSTALL IN RESIDENTIAL LABS ONLY
3 EQUALS ACCEPTED

TOTAL AMP. :

LIGHTING FIXTURE SCHEDULE

TYPE	QTY	MANUFACTURER	CATALOG NUMBER	DESCRIPTION	VOLT	MOUNT			LAMPS			WATTS/ FIXTURE	REMARKS
						F	S	*	NO.	WATT	TYPE		
AD		LITHONIA	2BLT4 72L ADP GZ10 LP840	2'X4' LAYIN LED TROFFER, 7200 LUMENS, 4000 K DEGREES, (0-10 Volt Dimming) UNIVERSAL VOLTAGE	120/ 277	X					LED	48	2
BD		LITHONIA	2BLT2 48L ADP GZ10 LP840	2'X2' LAYIN LED TROFFER, 4800 LUMENS, 4000 K DEGREES (0-10Volt Dimming), UNIVERSAL VOLTAGE	120/ 277	X					LED	44	2
C		PEERLESS	SQW4 LSL4 MSL4 80CRI 40K I500LMF 400LMF ZT 120 SCT 1EC CO32	4' WALL MOUNT LED DIRECT/INDIRECT, 500 LUMEN INDIRECT/FT, 400 LUMEN DIRECT/FT, 4000 K DEGREES	120/ 277	X					LED	40	2
C6		LITHONIA	LC6 GSKT, 6B1WTOR	RESIDENTIAL RECESSED DOWN LIGHT WITH AIR GASKETING AND GENERAL TASK WHITE STEP BAFFLE WIDE FLANGE	120				1		LED	15	2
D		JUNO	JSF 11IN 30K MVOLTZT WH	SLIMFORM SURFACE MOUNT LED FIXTURE	120/ 277		X				LED	15	2
E		LITHONIA	FMMUSL 9 148 30	SURFACE MOUNT LED MUSHROOM 1400 LUMEN	120						LED	20	2
ER		LITHONIA	AFB OELR DDBTXD WT	LED ARCHITECTURAL EMERGENCY REMOTE EGRESS LIGHT, WIDE THROW, DARK BRONZE	120								2
ELU		LITHONIA	ELM6L UVOLT LTP	EMERGENCY LIGHTING UNIT, TWO LAMPS, 563 LUMENS EACH, THERMOPLASTIC, WHITE	120/ 277		X				LED		2
F		WAC LIGHTING	WS-W15710-BZ	SODOR EXTERIOR LED WALL SCONCE	120		X				LED	11.5	2
G		ACCESS	62517LEDD-BS/ACR	2' LONG, 4000K, LED VANITY LIGHT WITH NOMINAL 2200 LUMENS	120						LED	25	2
HB15		LITHONIA	IBG 15000LM SEF AFL GND MVOLT GZ10 40K 80CRI CS3W	LED HIGHBAY, 14458 LUMENS, 4000K, ACRYLIC LENS, GENERAL DISTRIBUTION, TWIST LOCK PLUG, AIRCRAFT CABLE SUSPENSION	120/ 277			X			LED	97	2, 5
HB15E		LITHONIA	IBG 15000LM SEF AFL GND MVOLT GZ10 40K 80CRI PS30250, CS3W	LED HIGHBAY, 14458 LUMENS, 4000K, ACRYLIC LENS, GENERAL DISTRIBUTION, TWIST LOCK PLUG, AIRCRAFT CABLE SUSPENSION, 30W EMERGENCY BATTERY BACK-UP	120/ 277			X			LED	97	2, 5
HB24		LITHONIA	IBGN 24000LM SEF AFL GND MVOLT GZ10 40K 80CRI CS3W	LED HIGHBAY, 22727 LUMENS, 4000K, ACRYLIC LENS, GENERAL DISTRIBUTION	120/ 277			X			LED	172	2, 5
HB24E		LITHONIA	IBGN 24000LM SEF AFL GND MVOLT GZ10 40K 80CRI CS3WPS30250	LED HIGHBAY, 22727 LUMENS, 4000K, ACRYLIC LENS, GENERAL DISTRIBUTION, 30W EMERGENCY BATTERY	120/ 277			X			LED	175	2, 5
HVL		BROAN	QTX110HFLT	PROVIDE A COMBINATION HEATER, FAN, LIGHT & NIGHT LIGHT. (2) 60W EQUIVALENT LED BULBS, 1500 WATT FAN FORCED HEATER, 110 CFM VENT AND 7 WATT NIGHTLIGHT.	120		X				LED	15	2
J		LITHONIA	FEM-4000LM-IMAFL-WD-MVOLT-GZ10-40K-80CRI	48" LED, ENCLOSED, GASKETED, DAMP LOCATION, LENSED, 4000 LUMENS, WIDE DIST., MVOLT, 40K	MVLT		X				LED	30	2
K		RAB-HAZLED	HAZLED-42-CF	HAZARDOUS RATED, CLASS 1, DIVISION 2, GROUPS A,B,C &D, 42 WATT, NO GUARD, 6,000 LUMENS, 5K	MVLT		X				LED	42	2
OA		CREE	SEC-EDG-3M-WM-06-E-UNV-BZ-350-40K	LED EXTERIOR WALL SCONCE, TYPE III MEDIUM, UNV. VOLT, BRONZE, 350MA DRIVER, 4617 LUMENS, 4000K	120/ 277		X				LED	35	1
OB		CREE	SEC-EDG-3M-WM-04-E-UNV-BZ-350-40K	LED EXTERIOR WALL SCONCE, TYPE III MEDIUM, UNV. VOLT, BRONZE, 350MA DRIVER, 3114 LUMENS, 4000K	120/ 277		X				LED	46	1
OC		CREE	ARE-EDG-3M DA 14 E UL BZ 525 40K	CREE EDGE SERIES, TYPE 3 DISTRIBUTION, DIRECT ARM MOUNT, 23,085 LUMENS, 40K CRI, 25' SQUARE POLE, BRONZE	120/ 277			X			LED	232	1,7
OC2		CREE	ARE-EDG-3M DA 14 E UL BZ 525 40K	CREE EDGE SERIES, TYPE 3 DISTRIBUTION, DIRECT ARM MOUNT, 23,085 LUMENS, 40K CRI, TWO FIXTURES ON 25' SQUARE POLE, BRONZE	120/ 277			X			LED	464	1,7,8
OD		CREE	ARE-EDG-3M DA 06 E UL BZ 350 40K	CREE EDGE SERIES, TYPE 3 DISTRIBUTION, DIRECT ARM MOUNT, 7,033 LUMENS, 40K CRI, 12' SQUARE POLE, BRONZE	120/ 277			X			LED	66	1,9
OE		LITHONIA	WST LED P1 40K VF MVOLT	LED EXTERIOR WALL SCONCE, TRAPAZOID SHAPE, 1500 NOMINAL LUMENS	120/ 277		X				LED	15	2
PF		HUNTER FANS	MODEL: 59245	44 INCH 4 BLADE PADDLE FAN WITH (2) 10W LED LAMPS, BRONZE, INCLUDE UNIVERSAL CEILING FAN WALL CONTROL	120						LED	20	2
S45		LITHONIA	CLX L48 5000LM SEF WDL MVOLT GZ10 40K 80CRI CS3W WH ZACVH	4' LED STRIP, 5000 LUMEN, 4000K COLOR TEMP, WIDE DIFFUES LENS, AIRCRAFT CABLE SUSPENDED, TWIST LOCK PLUG	120/ 277			X			LED	66	2
S47		LITHONIA	CLX L48 7000LM SEF WDL MVOLT GZ10 40K 80CRI CS3W WH ZACVH	4' LED STRIP, 7000 LUMEN, 4000K COLOR TEMP, WIDE DIFFUES LENS, AIRCRAFT CABLE SUSPENDED, TWIST LOCK PLUG	120/ 277			X			LED	49	2
S88		LITHONIA	CLX L96 8000LM SEF WDL MVOLT GZ10 40K 80CRI CS3W WH ZACVH	8' LED STRIP, 8000 LUMEN, 4000K COLOR TEMP, WIDE DIFFUES LENS, AIRCRAFT CABLE SUSPENDED, TWIST LOCK PLUG	120/ 277			X			LED	53	2
S810		LITHONIA	CLX L96 10000LM SEF WDL MVOLT GZ10 40K 80CRI CS3W WH ZACVH	8' LED STRIP, 10000 LUMEN, 4000K COLOR TEMP, WIDE DIFFUES LENS, AIRCRAFT CABLE SUSPENDED, TWIST LOCK PLUG	120/ 277			X			LED	67	2
S810EM		LITHONIA Include Emergency Battery	CLX L96 10000LM SEF WDL MVOLT GZ10 40K 80CRI CS3W WH ZACVH E10WLCP	8' LED STRIP, 10000 LUMEN, 4000K COLOR TEMP, WIDE DIFFUES LENS, AIRCRAFT CABLE SUSPENDED, TWIST LOCK PLUG	120/ 277			X			LED	67	2
UC2		LITHONIA	UCEL 24UN 30K 90CRI SWR WHUCD JB	2' UNDERCOUNTER LED NOMINAL 700 LUMENS, 3000K, ROCKER SWITCH, WHITE	120		X				LED	10.2	2
WS		SONAR 8	SPC812 15W 2CR 4000K 120-277 CC OP WHT	LED WALL SCONCE, NOMINAL 12"H x 8"W x 4"D, OPAL LENS WITH TWO CENTER BARS, 4000K, WHITE	120/ 277		X				LED	14	2
X1/X2		LITHONIA	LHQM LED R	LED EXIT LIGHT, RED LETTERS, WHITE HOUSING, THERMO-PLASTIC, TWO 1.5 WATT LED EGRESS LIGHTS	120/ 277		X		–	–	LED	5	2
X3		LITHONIA	LHQM LED R HO	LED EXIT LIGHT, RED LETTERS, WHITE HOUSING, THERMO-PLASTIC, TWO 1.5 WATT LED EGRESS LIGHTS	120/ 277		X				LED		2

2

REMARKS:

1 NO EQUALS WILL BE ACCEPTED. ELECTRICAL CONTRACTOR SHALL PROVIDE AND INSTALL. THIS IS A CAMPUS-WIDE STANDARD FIXTURE.
2 EQUALS WILL BE ACCEPTED FOR THIS LIGHTING FIXTURE.
3 EMERGENCY BATTERY PACK IS REMOTE MOUNTED.
4 CONSULT ARCHITECT FOR COLOR.
5 PROVIDE TWISTLOCK PLUG ON SO CORD. FIELD COORDINATE CORD LENGTH. PROVIDE MATCHING RECEPACLE ON ROOF STRUCTURE.
6 WIRE SALVAGED SO CORD WITH TWISTLOCK PLUG TO NEW LIGHT FIXTURE. HANG FIXTURE FROM EXISTING SUSPENSION CABLES
7 PROVIDE A 25', 5" SQUARE STEEL POLE, REFER TO FIXTURE BASE DETAIL FOR BASE REQUIREMENTS.
8 SAME AS TYPE OC EXCEPT TWO FIXTURES ON ONE POLE. MOUNT 180 DEGREES APART. WATTAGE LISTED IS FOR TWO FIXTURES.
9 PROVIDE A 12', 3" SQUARE STEEL POLE. REFER TO POLE BASE DETAIL FOR POLE BASE REQUIREMENTS.

SWITCHBOARD #1 CIRCUIT BREAKERS (800 Amp, 480/277 VAC, Three-Phase, 4-Wire)

CIRCUIT BREAKER I.D.	SERVES	AMPERE RATING	NUMBER OF POLES	VOLTAGE CLASS	A.I.C RATING	ADJUSTABLE ?	IF ADJUSTABLE, INITIAL SETTING	SHUNT TRIP COIL?	OTHER FEATURES	METERING ON THIS BRANCH CIRCUIT	REMARKS
1	Transformer "T2" (75 KVA)	100	3	600 VOLT	65.0	NO		NO			1
2	Panelboard 'CLC' in lab #127	100	3	600 VOLT	65.0	NO		NO			1
3	Panelboard 'CLC' in lab #128	100	3	600 VOLT	65.0	NO		NO			1
4	Panelboard 'CLC' in lab #129	100	3	600 VOLT	65.0	NO		NO			1
5	Panelboard 'CLC' in lab #130	100	3	600 VOLT	65.0	NO		NO			1
6	Panelboard 'CLC' in lab #131	100	3	600 VOLT	65.0	NO		NO			1
7	Panelboard 'CLC' in lab #132	100	3	600 VOLT	65.0	NO		NO			1
8	BUSS DUCT	100	3	600 VOLT	65.0	NO		NO			1
9	Spare Breaker	100	3	600 VOLT	65.0	NO		NO			1
10	Spare Breaker	125	3	600 VOLT	65.0	NO		NO			1
11	Spare Breaker	200	3	600 VOLT	65.0	NO		NO			1
12	Spare Breaker	225	3	600 VOLT	65.0	NO		NO			1
	Space										
	Space										

Remarks:
1 SQUARE 'D' ONLY.

POWER TRANSFORMERS

TRANSFORMER IDENTIFICATION	NOMINAL RATING (Kva)	PRIMARY CHARACTERISTICS	PRIMARY CONNECTION	SECONDARY CHARACTERISTICS	SECONDARY CONNECTION	TP1 Compliant?	DESCRIPTION	MOUNTING	REMARKS
T1	112.5	480/3/60	Delta (3 Wire)	208/3/60	Wye (4 Wire)	Yes	Dry type - Energy Efficient	Floor-mount Interior	1
T2	75.0	480/3/60	Delta (3 Wire)	208/3/60	Wye (4 Wire)	Yes	Dry type - Energy Efficient	Floor-mount Interior	2
T3	30.0	480/3/60	Delta (3 Wire)	240/3/60	Delta (4 Wire)	Yes	Dry type - Energy Efficient	Floor-mount Interior	3
T4	30.0	480/3/60	Delta (3 Wire)	208/3/60	Wye (4 Wire)	Yes	Dry type - Energy Efficient	Floor-mount Interior	3

REMARKS:
1 Project requires Two (2). Provide Two (2) as an Alternate Bid, installed in Electrical Room #109, refer to Electric Riser Diagram.
2 Project requires One (1) installed in Electrical Room #120.
3 Project requires Six (6) total, One (1) installed in each Commercial Lab #127, #128, #129, #130, #131, and #132.

MOTOR & EQUIPMENT SCHEDULE

EQUIPMENT REFERENCE I.D.	EQUIPMENT DESCRIPTION	EQUIPMENT LOCATION			MOTOR OR EQUIPMENT REQUIREMENTS AND CHARACTERISTICS							MOTOR STARTERS				DISCONNECT SWITCHES						CONTROL WIRING BY		Branch Circuit or Feeder				REMARKS
		Room No.	Room Name	Elevation	Motor HP	Equipment Watts	VOLT	PH.	FLA	MCA	MOP	Starter Type	Furnished By	Installed By	Starter Size	Disconnect Type	Furnished By	Installed By	NEMA Enclo.	Fuse Size	Lockable?	MC	EC	N.C.	Conductor Size	Conduit Min. Size	Ground Size	
AHU-2	Air Handler -2	exterior	Exterior	Grade		27,400	480	3	33	33	45	VFD	MC	MC	N/A	Manual	EC	EC	3	N/A	Yes	X		3	6	1"	10	1
CUH-1	Cabinet Unit Heater	Vestibule	100	Wall			120	1	.5	15	20	N/A	N/A	N/A	N/A	Manual	EC	EC	1	N/A	No	X		2	12	3/4"	12	2

REMARKS:
1. Provide a 60 amp., 3-Pole, 480VAC, Non-Fused, Nema 3R Heavy Duty Disconnect Switch.
2. Make final connection to motor/equipment, provide a 20 amp., single-pole, non-fused, motor rated disconnect if required.

ARCHITECTURE
ENGINEERING
INTERIOR DESIGN

HSR ASSOCIATES INC.
100 MILWAUKEE STREET
LA CROSSE, WISCONSIN
PHONE: 608.784.1830
FAX: 608.782.5844
WEB SITE: www.hsrassociates.com

Consultant:

galileo CONSULTING GROUP
2920 EAST AVENUE SOUTH SUITE 102
LA CROSSE, WISCONSIN 54601
PHONE: (608) 787-9106 FAX: (608) 787-8995
E-MAIL: PPopowich@galileo-group.us

Project Title:
WESTERN TECHNICAL COLLEGE
APPRENTICESHIP CENTER REMODEL

Project Location:
2860 21ST PL S
LA CROSSE, WI 54601

Sheet Title:
ELECTRICAL SCHEDULES

HSR Project Number:
19021

Project Date:
FEBRUARY 2020

Drawn By:
GALILEO

Key Plan:

Revisions:

No.	Description	Date
2	ADDENDUM #2	2–25–20

Graphic Scale:
VARIES

Last Update:
2/25/2020

E601R

Panel- 'HB', 225 Amps.,480/277VAC,3-Phase,4- Wire, M.L.O., 22KAIC

Space No.	Serves	C/B Size/Type			Load (KVA)	C/B Size/Type	Serves	Space No.
1	LAB 1 WELDER 9	50/3				50/3	LAB 1 WELDER 15	2
3	"	50/3				50/3	"	4
5	"	50/3				50/3	"	6
7	LAB 1 WELDER 10	50/3				50/3	LAB 1 WELDER 16	8
9	"	50/3				50/3	"	10
11	"	50/3				50/3	"	12
13	LAB 1 WELDER 11	50/3				50/3	LAB 1 WELDER 17	14
15	"	50/3				50/3	"	16
17	"	50/3				50/3	"	18
19	LAB 1 WELDER 12	50/3				50/3	LAB 1 WELDER 18	20
21	"	50/3				50/3	"	22
23	"	50/3				50/3	"	24
25	LAB 1 WELDER 13	50/3				50/3	LAB 1 WELDER 19	26
27	"	50/3				50/3	"	28
29	"	50/3				50/3	"	30
31	LAB 1 WELDER 14	50/3				20/1	SPARE	32
33	"	50/3				20/1	SPARE	34
35	"	50/3				20/1	SPARE	36
37	SPARE	20/1				20/1	SPARE	38
39	SPARE	20/1				20/1	SPARE	40
41	SPARE	20/1				20/1	SPARE	42
43	SPACE						SPACE	44
45	SPACE						SPACE	46
47	SPACE						SPACE	48
49	SPACE						SPACE	50
51	SPACE						SPACE	52
53	SPACE						SPACE	54

LIGHTING (KVA)	
RECEPTACLES (KVA):	
MOTOR/EQUIPMENT (KVA):	
TOTAL (KVA):	
TOTAL (KVA):	

TOTAL AMP. :

NOTE:
1 PROVIDE A 54 SPACE PANELBOARD.
2 PROVIDE SQUARE 'D' ONLY.
3 PROVIDE AS AN ALTERNATE BID.

Panel- 'LA1', 400 Amps.,120/208VAC,3-Phase,4- Wire, M.BRK., 22KAIC

Space No.	Serves	C/B Size/Type			Load (KVA)	C/B Size/Type	Serves	Space No.
1	PANELBOARD 'FLA'	125/3				125/3	PANELBOARD 'LF'	2
3	"	125/3				125/3	"	4
5	"	125/3				125/3	"	6
7	XSTG	20/2				20/2	XSTG	8
9	"	20/2				20/2	"	10
11	XSTG	20/2				20/2	XSTG	12
13	"	20/2				20/2	"	14
15	XSTG	20/3				20/3	XSTG	16
17	"	20/3				20/3	"	18
19	"	20/3				20/3	"	20
21	XSTG	20/1				20/1	XSTG	22
23	XSTG	20/1				20/1	XSTG	24
25	XSTG	20/1				20/1	XSTG	26
27	XSTG	20/1				20/1	XSTG	28
29	XSTG	20/1				20/1	XSTG	30
31	XSTG	20/1				20/1	XSTG	32
33	XSTG	20/1				20/1	XSTG	34
35	XSTG	20/1				20/1	XSTG	36
37	XSTG	20/1				20/1	XSTG	38
39	XSTG	20/1				20/1	XSTG	40
41	XSTG	20/1				20/1	XSTG	42
43	XSTG	20/1				20/1	XSTG	44
45	SPARE	20/1				20/1	SPARE	46
47	SPARE	20/1				20/1	SPARE	48
49	SPARE	20/1				20/1	SPARE	50
51	SPARE	20/1				20/1	SPARE	52
53	SPARE	20/1				20/1	SPARE	54
55	SPARE	20/1				20/1	SPARE	56
57	SPARE	20/1				20/1	SPARE	58
59	SPARE	20/1				20/1	SPARE	60
61	SPARE	20/1				20/1	SPARE	62
63	SPARE	20/1				20/1	SPARE	64
65	SPARE	20/1				20/1	SPARE	66
67	SPARE	20/1				20/1	SPARE	68
69	SPARE	20/1				20/1	SPARE	70
71	SPARE	20/1				20/1	SPARE	72
73	SPARE	20/1				20/1	SPARE	74
75	SPARE	20/1				20/1	SPARE	76
77	SPARE	20/1				20/1	SPARE	78
79	SPARE	20/1				20/1	SPARE	80
81	SPARE	20/1				20/1	SPARE	82
83	SPARE	20/1				20/1	SPARE	84

LIGHTING (KVA)	
RECEPTACLES (KVA):	
MOTOR/EQUIPMENT (KVA):	
TOTAL (KVA):	
TOTAL (KVA):	

TOTAL AMP. :

NOTE:
1 PROVIDE A 84 SPACE PANELBOARD.
2 PROVIDE SQUARE 'D' ONLY.
3 PROVIDE AS AN ALTERNATE BID.

Panel- 'LB1', 400 Amps.,120/208VAC,3-Phase,4- Wire, M.BRK., 22KAIC

Space No.	Serves	C/B Size/Type			Load (KVA)	C/B Size/Type	Serves	Space No.
1	BUSSDUCT #107	100/3				125/3	PANELBOARD 'LG'	2
3	"	100/3				125/3	"	4
5	"	100/3				125/3	"	6
7	PANELBOARD 'LJ'	125/3				20/2	XSTG	8
9	"	125/3				20/2	XSTG	10
11	"	125/3				20/1	XSTG	12
13	XSTG	20/1				20/1	XSTG	14
15	XSTG	20/1				20/1	XSTG	16
17	XSTG	20/1				20/1	XSTG	18
19	XSTG	20/1				20/1	XSTG	20
21	XSTG	20/1				20/1	XSTG	22
23	XSTG	20/1				20/1	XSTG	24
25	XSTG	20/1				20/1	XSTG	26
27	XSTG	20/1				20/1	XSTG	28
29	XSTG	20/1				20/1	XSTG	30
31	XSTG	20/1				20/1	XSTG	32
33	XSTG	20/1				20/1	XSTG	34
35	XSTG	20/1				20/1	XSTG	36
37	XSTG	20/1				20/1	XSTG	38
39	XSTG	20/1				20/1	XSTG	40
41	XSTG	20/1				20/1	XSTG	42
43	XSTG	20/1				20/1	XSTG	44
45	SPARE	20/1				20/1	SPARE	46
47	SPARE	20/1				20/1	SPARE	48
49	SPARE	20/1				20/1	SPARE	50
51	SPARE	20/1				20/1	SPARE	52
53	SPARE	20/1				20/1	SPARE	54
55	SPARE	20/1				20/1	SPARE	56
57	SPARE	20/1				20/1	SPARE	58
59	SPARE	20/1				20/1	SPARE	60
61	SPARE	20/1				20/1	SPARE	62
63	SPARE	20/1				20/1	SPARE	64
65	SPARE	20/1				20/1	SPARE	66
67	SPARE	20/1				20/1	SPARE	68
69	SPARE	20/1				20/1	SPARE	70
71	SPARE	20/1				20/1	SPARE	72
73	SPARE	20/1				20/1	SPARE	74
75	SPARE	20/1				20/1	SPARE	76
77	SPARE	20/1				20/1	SPARE	78
79	SPARE	20/1				20/1	SPARE	80
81	SPARE	20/1				20/1	SPARE	82
83	SPARE	20/1				20/1	SPARE	84

LIGHTING (KVA)	
RECEPTACLES (KVA):	
MOTOR/EQUIPMENT (KVA):	
TOTAL (KVA):	
TOTAL (KVA):	

TOTAL AMP. :

NOTE:
1 PROVIDE A 84 SPACE PANELBOARD.
2 PROVIDE SQUARE 'D' ONLY.
3 PROVIDE PANELBOARD AS AN ALTERNATE BID.

2

Panel- 'LF', 125 Amps.,120/208VAC,3-Phase,4- Wire, M.BRK., 22KAIC

Space No.	Serves	C/B Size/Type			Load (KVA)	C/B Size/Type	Serves	Space No.
1	ELECTRIC WTR. HEATER	30/2	2.50		1.04	20/2	COMM. GARBAGE DISPOSAL	2
3	"	30/2	2.50		1.04	20/2	"	4
5	GARBAGE DISP. RECEPTACLE	20/1	0.75		0.36	20/1	RECEPTACLE (GFI BRK.)	6
7	DISHWASHER RECEPTACLE	20/1	1.50		2.00	30/2	ELECTRIC WATER HEATER	8
9	ELECTRIC WATER HEATER	30/2	2.00		2.00	30/2	"	10
11	"	30/2	2.00		1.00	20/1	RECEPTACLE - GARBAGE DISP.	12
13	DISHWASHER RECEPTACLE	20/1	1.00		2.00	30/2	ELECTRIC BOOSTER HTR.	14
15	RECEPTACLE	20/1	0.72		2.00	30/2	"	16
17	RECEPTACLE (GFI BRK.)	20/1	1.00		1.00	20/1	RECEPTACLE (SUMP PUMP)	18
19	SUMP PUMP RECEPTACLE	20/1	0.70		0.18	20/1	RECEPTACLE (GFI BRK.)	20
21	RECEPTACLE GFI BRK.)	20/1	1.00		0.36	20/1	RECEPTACLE (GFI BRK.)	22
23	RECEPTACLE (GFI BRK.)	20/1	0.36		0.36	20/1	RECEPTACLE (GFI BRK.)	24
25	RECEPTACLE (GFI BRK.)	20/1	0.36		0.18	20/1	AUTOMATIC FLUSH VALVES (GFI BRK.)	26
27	ELECTRIC WTR. COOLER (GFI BRK.)	20/1	0.50			20/1	SPARE	28
29	SPARE	20/1				20/1	SPARE	30
31	SPARE	20/1				20/1	SPARE	32
33	SPARE	20/1				20/1	SPARE	34
35	SPARE	20/1				20/1	SPARE	36
37	SPARE	20/1				20/1	SPARE	38
39	SPARE	20/1				20/1	SPARE	40
41	SPARE	20/1				20/1	SPARE	42

LIGHTING (KVA)	
RECEPTACLES (KVA):	5
MOTOR/EQUIPMENT (KVA):	17
TOTAL (KVA):	**22**

TOTAL AMP. :	**74.7**

NOTE:
1 PROVIDE A 42 SPACE PANELBOARD.

ARCHITECTURE
ENGINEERING
INTERIOR DESIGN

HSR ASSOCIATES INC.
100 MILWAUKEE STREET
LA CROSSE, WISCONSIN
PHONE: 608.784.1830
FAX: 608.782.5844
WEB SITE: www.hsrassociates.com

Consultant:

galileo
CONSULTING GROUP
2920 EAST AVENUE SOUTH SUITE 102
LA CROSSE, WISCONSIN 54601
PHONE: (608) 787-9106 FAX: (608) 787-8995
E-MAIL: PPopowich@galileo-group.us

Project Title: **WESTERN TECHNICAL COLLEGE APPRENTICESHIP CENTER REMODEL**

Project Location: **2860 21ST PL S**
LA CROSSE, WI 54601

Sheet Title: ELECTRICAL SCHEDULES

HSR Project Number: **19021**

Project Date: **FEBRUARY 2020**

Drawn By: **GALILEO**

Key Plan:

Revisions:

No.	Description	Date
2	ADDENDUM #2	2–25–20

Graphic Scale: **VARIES**

Last Update: **2/25/2020**

E603R

Panel- 'LG', 125 Amps.,120/208VAC,3-Phase,4- Wire, M.BRK., 22KAIC

Space No.	Serves	C/B Size/Type			Load (KVA)	C/B Size/Type	Serves	Space No.
1	CORD REEL (GFI BRK.)	20/1	0.36		0.36	20/1	CORD REEL (GFI BRK.)	2
3	CORD REEL (GFI BRK.)	20/1	0.36		0.36	20/1	CORD REEL (GFI BRK.)	4
5	CORD REEL (GFI BRK.)	20/1	0.36		0.36	20/1	CORD REEL (GFI BRK.)	6
7	CORD REEL (GFI BRK.)	20/1	0.36		0.36	20/1	CORD REEL (GFI BRK.)	8
9	CORD REEL (GFI BRK.)	20/1	0.36		0.36	20/1	CORD REEL (GFI BRK.)	10
11	CORD REEL (GFI BRK.)	20/1	0.36		0.36	20/1	CORD REEL (GFI BRK.)	12
13	RECEPTACLE (GFI BRK.)	20/1	0.36		0.54	20/1	RECEPTACLE (GFI BRK.)	14
15	RECEPTACLE (GFI BRK.)	20/1	0.72		0.18	20/1	RECEPTACLE	16
17	RECEPTACLE	20/1	0.36		0.72	20/1	RECEPTACLE	18
19	RECEPTACLE	20/1	0.90		0.18	20/1	OUTSIDE RECEPTACLE	20
21	RECEPTACLE	20/1	1.44		1.60	20/1	RECEPTACLE	22
23	RECEPTACLE	20/1	1.10		1.10	20/1	RECEPTACLE	24
25	AIR COMPRESSOR	30/3	2.00		0.54	20/1	RECEPTACLE (GFI BRK.)	26
27	"	30/3	2.00		0.54	20/1	RECEPTACLE (GFI BRK.)	28
29	"	30/3	2.00		0.18	20/1	RECEPTACLE	30
31	RECEPTACLE (GFI BRK.)	20/1	0.54		0.25	20/1	ELECT. ROOM LIGHTING	32
33	RECEPTACLE	20/1	1.10		1.10	20/1	RECEPTACLE	34
35	RECEPTACLE	20/1	1.10		1.10	20/1	RECEPTACLE	36
37	RECEPTACLE	20/1	1.10		1.10	20/1	RECCEPTACLE	38
39	RECEPTACLE	20/1	0.36		0.33	20/3	3-PHASE RECEPTACLE	40
41	3-PHASE RECEPTACLE	20/3	0.33		0.33	20/3	"	42
43	"	20/3	0.33		0.33	20/3	"	44
45	"	20/3	0.33			20/1	SPARE	46
47	SPARE	20/1				20/1	SPARE	48
49	SPARE	20/1				20/1	SPARE	50
51	SPARE	20/1				20/1	SPARE	52
53	SPARE	20/1				20/1	SPARE	54

2

LIGHTING (KVA)	
RECEPTACLES (KVA):	14.24
MOTOR/EQUIPMENT (KVA):	6
	20
TOTAL (KVA):	**20.24**

TOTAL AMP. : **56.22**

NOTE:

1 PROVIDE A 72 SPACE PANELBOARD.

Panel- 'LJ', 125 Amps.,120/208VAC,3-Phase,4- Wire, M.BRK., 22KAIC

Space No.	Serves	C/B Size/Type			Load (KVA)	C/B Size/Type	Serves	Space No.
1	MARVEL BANDSAW	30/3	2.30			15/3	PEDESTAL GRINDER	2
3	"	30/3	2.30			15/3	"	4
5	"	30/3	2.30			15/3	"	6
7	SPACE						SPACE	8
9	SPACE						SPACE	10
11	SPACE						SPACE	12
13	CORD REEL (GFI BRK.)	20/1	0.36		0.36	20/1	CORD REEL (GFI BRK.)	14
15	CORD REEL (GFI BRK.)	20/1	0.36		0.18	20/1	RECEPTACLE (GFI BRK.)	16
17	RECEPTACLE (GFI BRK.)	20/1	0.18		0.18	20/1	RECEPTACLE (GFI BRK.)	18
19	ELLIS BANDSAW (GFI BRK.)	20/1	1.60		0.90	20/1	DRILL PRESS (GFI BRK.)	20
21	DRILL PRESS (GFI BRK.)	20/1	0.90		0.70	20/1	PEDESTAL GRINDER (GFI BRK.)	22
23	RECEPTACLE (GFI BRK.)	20/1	0.18		0.36	20/1	RECEPTACLE (GFI BRK.)	24
25	RECEPTACLE (GFI BRK.)	20/1	0.18		0.18	20/1	RECEPTACLE (GFI BRK.)	26
27	DAKE PRESS (GFI BRK.)	20/1	1.90		0.54	20/1	RECEPTACLE (GFI BRK.)	28
29	RECEPTACLE (GFI BRK.)	20/1	0.36		0.36	20/1	GRINDER BOOTH RECEPTACLE (GFI BRK.)	30
31	CORD REEL (GFI BRK.)	20/1	0.36		0.36	20/1	RECEPTACLE (GFI BRK.)	32
33	OVERHEAD DOOR OPENER	20/1	0.75			20/1	SPARE	34
35	SPARE	20/1				20/1	SPARE	36
37	SPARE	20/1				20/1	SPARE	38
39	SPARE	20/1				20/1	SPARE	40
41	SPARE	20/1				20/1	SPARE	42
43	SPARE	20/1				20/1	SPARE	44
45	SPARE	20/1				20/1	SPARE	46
47	SPARE	20/1				20/1	SPARE	48
49	SPARE	20/1				20/1	SPARE	50
51	SPARE	20/1				20/1	SPARE	52
53	SPARE	20/1				20/1	SPARE	54

2

LIGHTING (KVA)	
RECEPTACLES (KVA):	4
MOTOR/EQUIPMENT (KVA):	10.3
TOTAL (KVA):	**19**

TOTAL AMP. : **53**

NOTE:

1 PROVIDE A 54 SPACE PANELBOARD.

ARCHITECTURE
ENGINEERING
INTERIOR DESIGN

HSR ASSOCIATES INC.
100 MILWAUKEE STREET
LA CROSSE, WISCONSIN
PHONE: 608.784.1830
FAX: 608.782.5844
WEB SITE: www.hsrassociates.com

Consultant:

galileo
CONSULTING GROUP
2920 EAST AVENUE SOUTH SUITE 102
LA CROSSE, WISCONSIN 54601
PHONE: (608) 787-9106 FAX: (608) 787-8995
E-MAIL: PPopowich@galileo-group.us

Project Title: **WESTERN TECHNICAL COLLEGE APPRENTICESHIP CENTER REMODEL**

Project Location: **2860 21ST PL S**
LA CROSSE, WI 54601

Sheet Title: ELECTRICAL SCHEDULES

HSR Project Number:
19021

Project Date:
FEBRUARY 2020

Drawn By:
GALILEO

Key Plan:

Revisions:

No.	Description	Date
2	ADDENDUM #2	2-25-20

Graphic Scale:
VARIES

Last Update:
2/25/2020

E604R

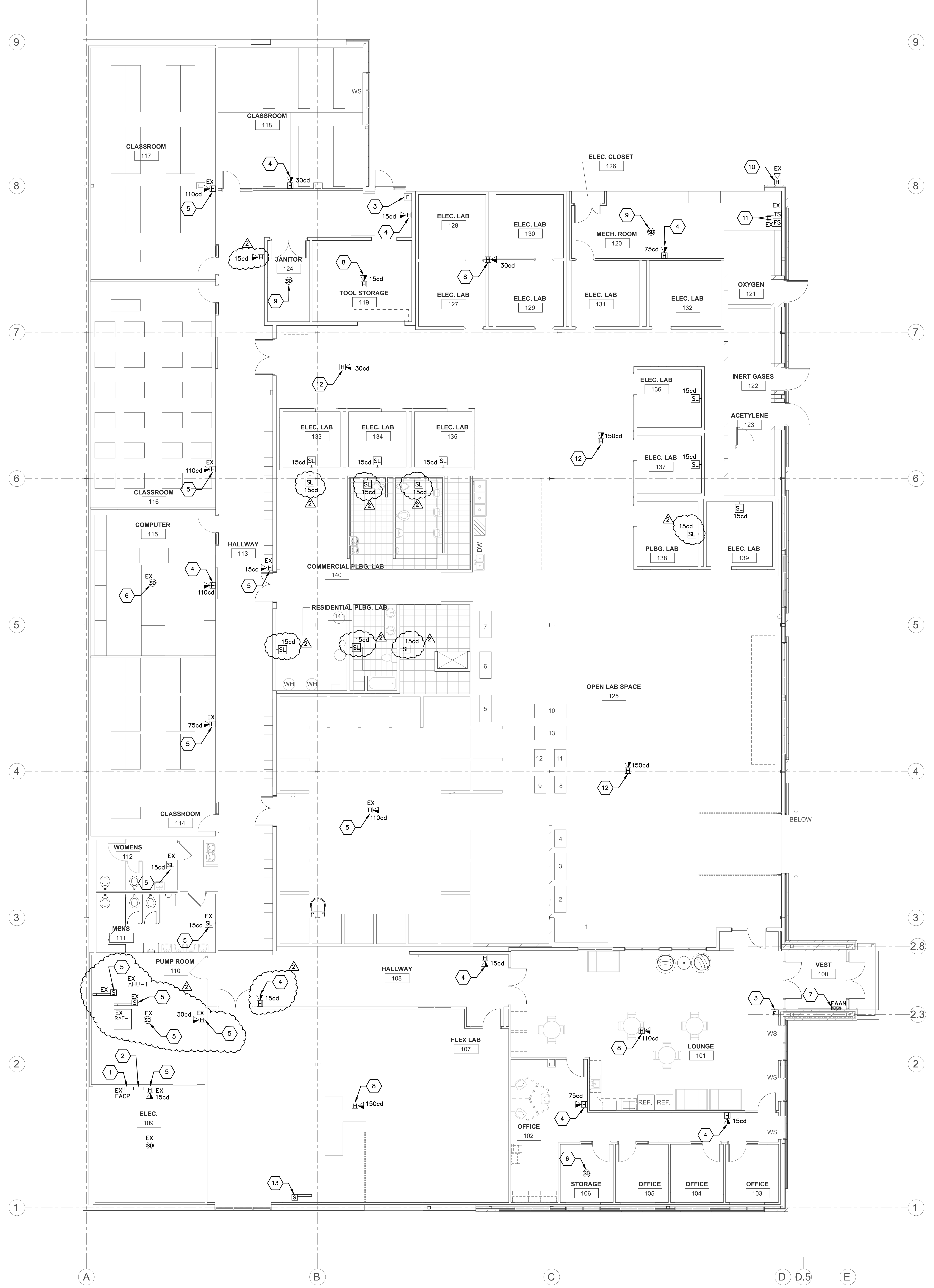
A
B
C
D
D.5
E
9
8
7
6
5
4
3
2.8
2.3
2
1
CLASSROOM 117
CLASSROOM 118
WS
ELEC. CLOSET 126
ELEC. LAB 128
ELEC. LAB 130
MECH. ROOM 120
ELEC. LAB 127
ELEC. LAB 129
ELEC. LAB 131
ELEC. LAB 132
OXYGEN 121
JANITOR 124
TOOL STORAGE 119
INERT GASES 122
ACETYLENE 123
ELEC. LAB 136
ELEC. LAB 137
ELEC. LAB 133
ELEC. LAB 134
ELEC. LAB 135
CLASSROOM 116
COMPUTER 115
HALLWAY 113
COMMERCIAL PLBG. LAB 140
PLBG. LAB 138
ELEC. LAB 139
RESIDENTIAL PLBG. LAB 141
WH
WH
DW
OPEN LAB SPACE 125
CLASSROOM 114
BELOW
WOMENS 112
MENS 111
PUMP ROOM 110
AHU-1
RAF-1
HALLWAY 108
VEST 100
FLEX LAB 107
LOUNGE 101
ELEC. 109
FACP
FAAN
OFFICE 102
REF.
REF.
STORAGE 106
OFFICE 105
OFFICE 104
OFFICE 103
EX
15cd
30cd
75cd
110cd
150cd
SL
SD
F
H
TS
FS
1
2
3
4
5
6
7
8
9
10
11
12
13

1 FIRE ALARM PLAN
FA01R SCALE: 1/8" = 1'-0" 1907-E-FA01

GENERAL NOTES:

A. EXISTING NOTIFIER FIRE ALARM CONTROL PANEL IS LOCATED IN ELECTRICAL ROOM **109.** REFER TO PHOTO **#14/E501 & #16/E501**.

B. REUSE EXISTING JUNCTION BOXES, CONDUIT, ETC. TO THE EXTENT POSSIBLE FOR NEW FIRE ALARM SYSTEM WIRING.

C. CONTACT:

FIRE PROTECTION SPECIALISTS
1906 COMMERCE ST.
BANGOR, WI 54614
608-486-1120

KEYED FIRE ALARM PLAN NOTES: ⬡

1. LOCATION OF EXISTING 'NOTIFIER' FIRE ALARM CONTROL PANEL. REFER TO PHOTO **#14/E501 & #16/E501**.
2. LOCATION OF EXISTING FIRE ALARM AUTO DIALER.
3. REINSTALL A PREVIOUSLY REMOVED MANUAL PULL STATION.
4. REINSTALL A PREVIOUSLY REMOVED WALL-MOUNTED NOTIFICATION DEVICE.
5. EXISTING FIRE ALARM DEVICE TO REMAIN AS IS.
6. REINSTALL A PREVIOUSLY REMOVED SMOKE DETECTOR.
7. REINSTALL A PREVIOUSLY REMOVED FIRE ALARM ANNUNCIATOR PANEL. REFER TO PHOTO **#31/E501**.
8. PROVIDE A NEW CEILING MOUNTED ADDRESSABLE NOTIFICATION DEVICE.
9. PROVIDE A NEW SMOKE DETECTOR.
10. DISCONNECT AND RECONNECT EXISTING FIRE SPRINKLER SYSTEM HORN/STROBE AS REQUIRED DUE TO REMODEL WORK ON EXTERIOR WALL.
11. EXISTING FIRE SPRINKLER SYSTEM FLOW AND TAMPER SWITCH TO REMAIN AS IS.
12. REINSTALL A PREVIOUSLY REMOVED CEILING MOUNTED NOTIFICATION DEVICE.
13. PROVIDE A NEW DUCT SMOKE DETECTOR FOR AHU-2, COORDINATE WITH HVAC CONTRACTOR.

FIRE ALARM SYSTEM

NOTES:
MOUNTING HEIGHTS FOR FIRE ALARM DEVICES:
MANUAL PULL STATION = 48"
HORN/STROBE = 80"
STROBE LIGHTS = 80"
MAGNETIC DOOR HOLDERS = AS SPECIFIED

CM	ADDRESSIBLE CONTROL MODULE
CO	CARBON MONOXIDE DETECTOR
DH	MAGNETIC DOOR HOLDER
F	MANUAL PULL STATION
FACP	FIRE ALARM CONTROL PANEL(FACP)
FAAN	FIRE ALARM ANNUNCIATOR
H	HEAT DETECTOR
H X	WEATHER PROOF FIRE HORN/STROBE X = EXTERIOR
S	DUCT SMOKE DETECTOR
SD	SMOKE DETECTOR
SD	SMOKE DETECTOR WITH AUXILIARY CONTACTS
SV	F.A. SPEAKER / VISUAL
FS	SPRINKLER SYSTEM WATER FLOW SWITCH
TS	SPRINKLER SYSTEM TAMPER SWITCH

ARCHITECTURE
ENGINEERING
INTERIOR DESIGN

HSR ASSOCIATES INC.
100 MILWAUKEE STREET
LA CROSSE, WISCONSIN
PHONE: 608.784.1830
FAX: 608.782.5844
WEB SITE: www.hsrassociates.com

Consultant:

galileo CONSULTING GROUP
2920 EAST AVENUE SOUTH SUITE 102
LA CROSSE, WISCONSIN 54601
PHONE: (608) 787-9106 FAX: (608) 787-8995
E-MAIL: PPopowich@galileo-group.us

Project Title: **WESTERN TECHNICAL COLLEGE APPRENTICESHIP CENTER REMODEL**

Project Location: **2860 21ST PL S**
LA CROSSE, WI 54601

Sheet Title: FIRE ALARM PLAN

HSR Project Number: **19021**

Project Date: **FEBRUARY 2020**

Drawn By: **GALILEO**

Key Plan:

Revisions:

No.	Description	Date
2	ADDENDUM #2	2-25-20

Graphic Scale: **VARIES**

Last Update: **2/25/2020**

FA01R